HL-2 Series

Parts Breakdown

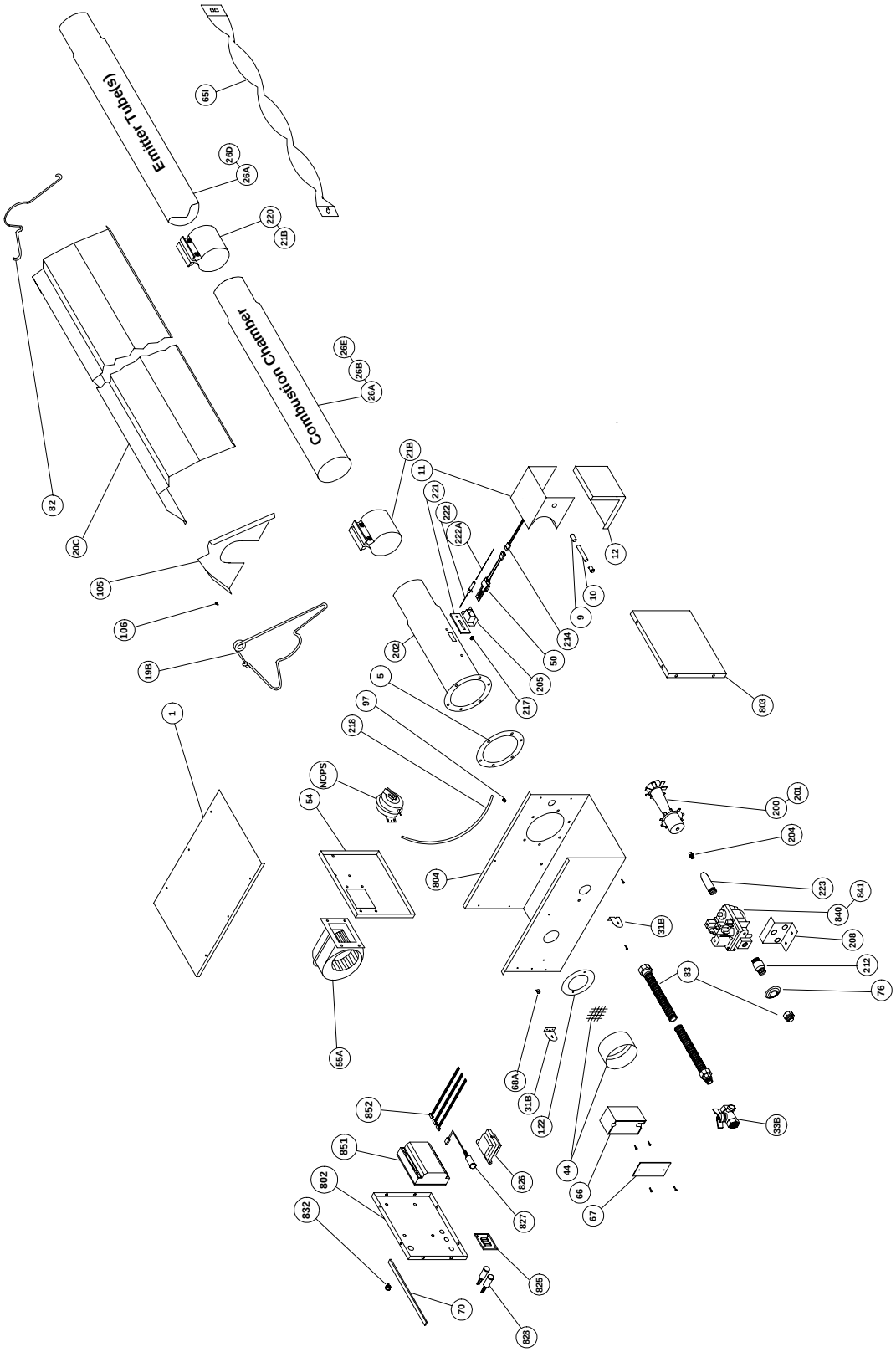

Basic Parts List

HL-2 SERIES PARTS LISTING

TP#	ITEM		TP#	ITEM
TP-1	CONTROL BOX COVER		TP-111	5' ALUM. TUBE, PAINTED W/1 CLAMP
TP-5	FLANGE GASKET		TP-112	5' REFLECTOR
TP-9	CONDUIT COUPLING		TP-122	GASKET FOR AIR ORIFICE & AIR COLLAR
TP-10	CONDUIT 4" X 1/2"		TP-200	BURNER (50 TO 100 MBTU/H)
TP-11	GLO-BAR IGNITOR BOX		TP-201	BURNER (125 MBTU/H TO 200 MBTU/H)
TP-12	GLO-BAR IGNITOR BOX COVER		TP-202	16" BURNER TUBE W/ FLANGE
TP-14	SIGHT GLASS GASKET		TP-204	GAS ORIFICE - CONSULT FACTORY
TP-15	SIGHT GLASS		TP-205	GLO-BAR HOLDER
TP-16	SIGHT GLASS WASHER		TP-208	"Z" MOUNTING BRACKET
TP-19B	WIRE HANGER		TP-212	1/2" X 3" PIPE NIPPLE
TP-20C	120" REFLECTOR		TP-217	PRESSURE BARB FITTING
TP-21B	TUBE CLAMP		TP-218	EXHAUST PRESSURE TUBE (VINYL)
TP-26A	10 FT. ALUMINIZED RADIANT/COMBUSTION TUBE		TP-220	STAIN. STL. TUBE CLAMP (175 & 200 MBTU/H)
TP-26B	10 FT. TITANIUM COATED COMBUSTION TUBE		TP-221	GLO-BAR HOLDER GASKET
TP-26D	10 FT. 304 STAINLESS RADIANT TUBE		TP-222	FLAME ROD
TP-26E	10 FT. 409 STAINLESS COMBUSTION TUBE		TP-223	GAS MANIFOLD
TP-31B	MOUNTING BRACKET		TP-802	END PANEL - LEFT
TP-33B	1/2" GAS COCK		TP-803	END PANEL - RIGHT
TP-44	AIR ORIFICE W/SCREEN (CONSULT FACTORY)		TP-804	CONTROL BOX
TP-50	GLO-BAR IGNITOR		TP-825	OPTIONAL HLRB RELAY BOARD
TP-54	BURNER BOX CENTER PANEL		TP-826	40VA TRANSFORMER (OLD TP219)
TP-55A	FAN BLOWER		TP-827	RED LED DISPLAY DIAGNOSTIC LIGHT
TP-65I	33" INTERLOCKING HEAT DIFFUSER (BAFFLE)		TP-828	YELLOW OPERATIONAL IND. LIGHT (OLD TP216)
TP-66	2" X 4" OUTLET BOX		TP-832	THERMOSTAT TERMINAL STRIP (OLD TP213)
TP-67	2" X 4" OUTLET BOX COVER		TP-840	36E96-224 TWO STAGE GAS VALVE-NAT (OLD TP210)
TP-68A	STRAIN RELIEF BUSHING		TP-841	36E96-226 TWO STAGE GAS VALVE-LP (OLD TP210P)
TP-70	CONTROL BOX COVER GASKET (PER FOOT**)		TP-851	MICRO-60-24 DIAGNOSTIC CIRCUIT BOARD
TP-76	RUBBER GROMMET		TP-852	WIRE HARNESS SET (3 PCS.) FOR MICRO 60 BOARD
TP-82	REFLECTOR CENTER SUPPORT		**TP-NOPS**	N. O. Pressure Switch (Select Switch Below, **BTU Dependent**)
TP-83	STAINLESS STEEL FLEX CONNECTOR		(TP-61B)	DIFFERENRIAL PRESSURE SWITCH - 50 TO 100 MBTU/H
TP-97	1/4" x 1/4" BRASS INT./EXT. ATMOS. BARB FITTING		(TP-61E)	DIFFERENTIAL PRESSURE SWITCH - 125 & 150 MBTU/H
TP-105	REFLECTOR END CAP		(TP-61D)	DIFFERENTIAL PRESSURE SWITCH - 175 MBTU/H
TP-106	REFLECTOR CLIP		(TP-1261A)	DIFFERENTIAL PRESSURE SWITCH - 200 MBTU/H
TP-108	5' AL-TI TUBE, PAINTED W. ONE CLAMP			

6' TOTAL NEEDED TO COVER OUTER EDGES OF A BURNER BOX.
INDICATES THAT THE PART IS BEING USED IN CURRENT PRODUCTION.