AVD Series

Installation Manual

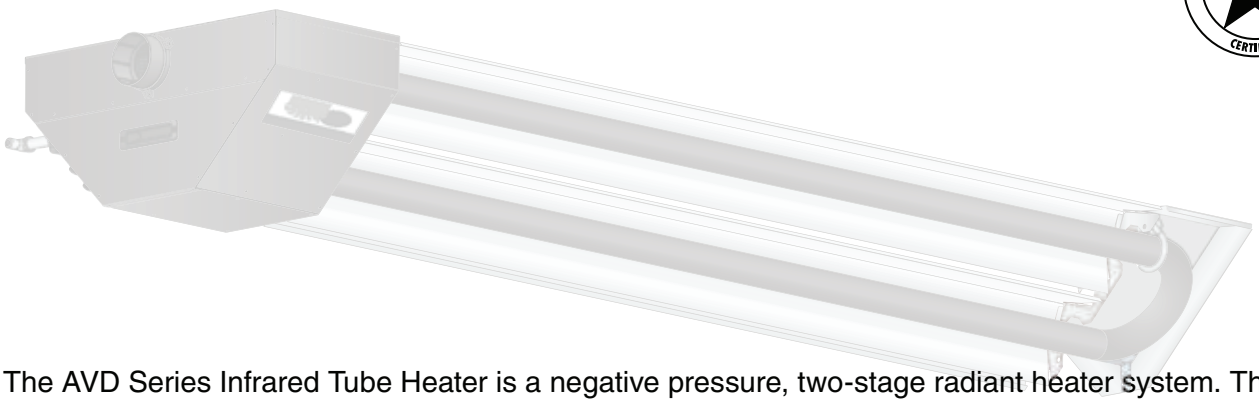

The AVD Series Infrared Tube Heater is a negative pressure, two-stage radiant heater system. This manual provides specific information related to the AVD Series model. All persons involved with the installation, operation and maintenance of the heater system must read and understand the information in this manual.

⚠ WARNING

Improper installation, adjustment, alteration, service or maintenance can cause property damage, injury or death. Read the installation, operation and maintenance instructions thoroughly before installing or servicing this equipment.

This heater **must** be installed and serviced by trained gas installation and service personnel only. Failure to comply could result in personal injury, asphyxiation, death, fire or property damage.

Do not store or use gasoline or other flammable vapors and liquids in the vicinity of this or any other appliance.

In locations used for the storage of combustible materials, signs **must** be posted to specify the maximum permissible stacking height to maintain the required clearances from the heater to the combustibles. Signs must either be posted adjacent to the heater thermostats or in the absence of such thermostats, in a conspicuous location.

Not for residential use! Do not use this heater in the home, sleeping quarters, attached garages, etc. Installation of a commercial tube heater system in residential indoor spaces may result in property damage, serious injury, asphyxiation or death.

For Your Safety

If you smell gas:

- Open windows.
- Do not touch any electrical switch.
- Extinguish any open flame.
- Do not use any phone in your building.
- Do not try to light any appliance.
- Immediately call your gas supplier from a neighbor's phone.
- Follow the gas supplier's instructions.
- If you cannot reach your gas supplier, call the fire department.

Keep these instructions for future reference.

LIOAVD-Rev. 30612
Print: 1M-1/11_r8-4/15(DRP)

Contents

1.0 Introduction 3
Overview 3
Heater Components 3
Specifications 3
Data Labels and Their Locations 4

2.0 Safety 6
Warning Symbols 6
Applications 7
Standards, Certifications and Government Regulations 7
Clearance to Combustibles 8

3.0 Installation 10
Design Considerations and Prechecks 10
Recommended Mounting Heights and Coverages 11
Application Guidelines 11
Heater Packaging 12
Heater Mounting Requirements and Weights 12
Heater Assembly 13
Preparing Points for Hanging 14
Hanging Pre-Assembled Unit 16
Venting 18
Combustion Air Requirements 23
Gas Supply 25
Electrical Requirements and Wiring Diagrams 28

4.0 Operation 32
Start-up and Shutdown Procedures 32
Sequence of Operation 33

5.0 Maintenance 34
Troubleshooting Guide 34
Heater Components and Parts List 38
Routine Inspection 40
Maintenance Log 41
Limited Warranty Terms and Conditions 43
Kit Contents Check List 44

1.0 Introduction

Overview

The intent of this manual is to provide information regarding safety, design guidelines, installation, operation and maintenance of the radiant heater. You must read and understand the instructions and all safety warnings before installing the radiant heater.

Heater Components

Prior to installation, verify that the heater's gas type and voltage (as listed on the rating plate) match that of your application. Also verify that you have received all heater components included with your radiant tube heater. Refer to page 44 for a list of the kit contents for your Series heater. Materials not included in the heater kit contents (e.g., screws, vent material, terminals, etc.) are the responsibility of the installer. Notify your product representative or Detroit Radiant Products of any discrepancy or missing kit contents prior to installing unit.

Specifications

Chart 1.1 • AVD Series Specifications

Model Number	Gas Type	BTU/h Low Fire*	BTU/h High Fire*	Recommended Mounting Heights**	Unit Weight	Overall Unit Length
AVD-60N	Natural Gas	40,000	60,000	6 to 8 ft.	103 lbs.	106"
AVD-60P	Propane	40,000	60,000	6 to 8 ft.	103 lbs.	106"
AVD-80N	Natural Gas	50,000	80,000	6 to 9 ft.	103 lbs.	106"
AVD-80P	Propane	50,000	80,000	6 to 9 ft.	103 lbs.	106"

* Input at full rate.
** Recommended mounting heights are provided as a guideline. Actual conditions may dictate variations from this data.

Shipping / Boxing:

B = Burner Control Box (15#) & (31.5"L x 17.5"W x 15.5"H)
T = Emitter Assembly and Reflector Box (88#) & (91"L x 31"W x 14"H)

NOTE: See Kit Contents on page 44.

⚠ WARNING

Improper installation, adjustment, alteration, service or maintenance can cause property damage, serious injury or death. Read and understand, the installation, operating and maintenance instructions thoroughly before installing or servicing this equipment. Only trained, qualified gas installation and service personnel may install or service this equipment.

Data Labels and Their Locations

All labels must be maintained on the radiant tube heater and should be replaced if they become illegible. Contact either your local distributor or the product manufacturer for obtaining replacement signs or labels.

It is important to provide warnings to alert individuals to potential hazards and safety actions. In locations used for the storage of combustible materials, post a placard “specifying the maximum permissible stacking height to maintain the required clearances from the heater to the combustibles” near the heaters thermostat or in absence of such thermostats in a conspicuous location. Contact Detroit Radiant Products or an authorized dealer for Clearance Safety Limit Signs or for Clearance Safety Limit Tags (one tag is provided with each heater).

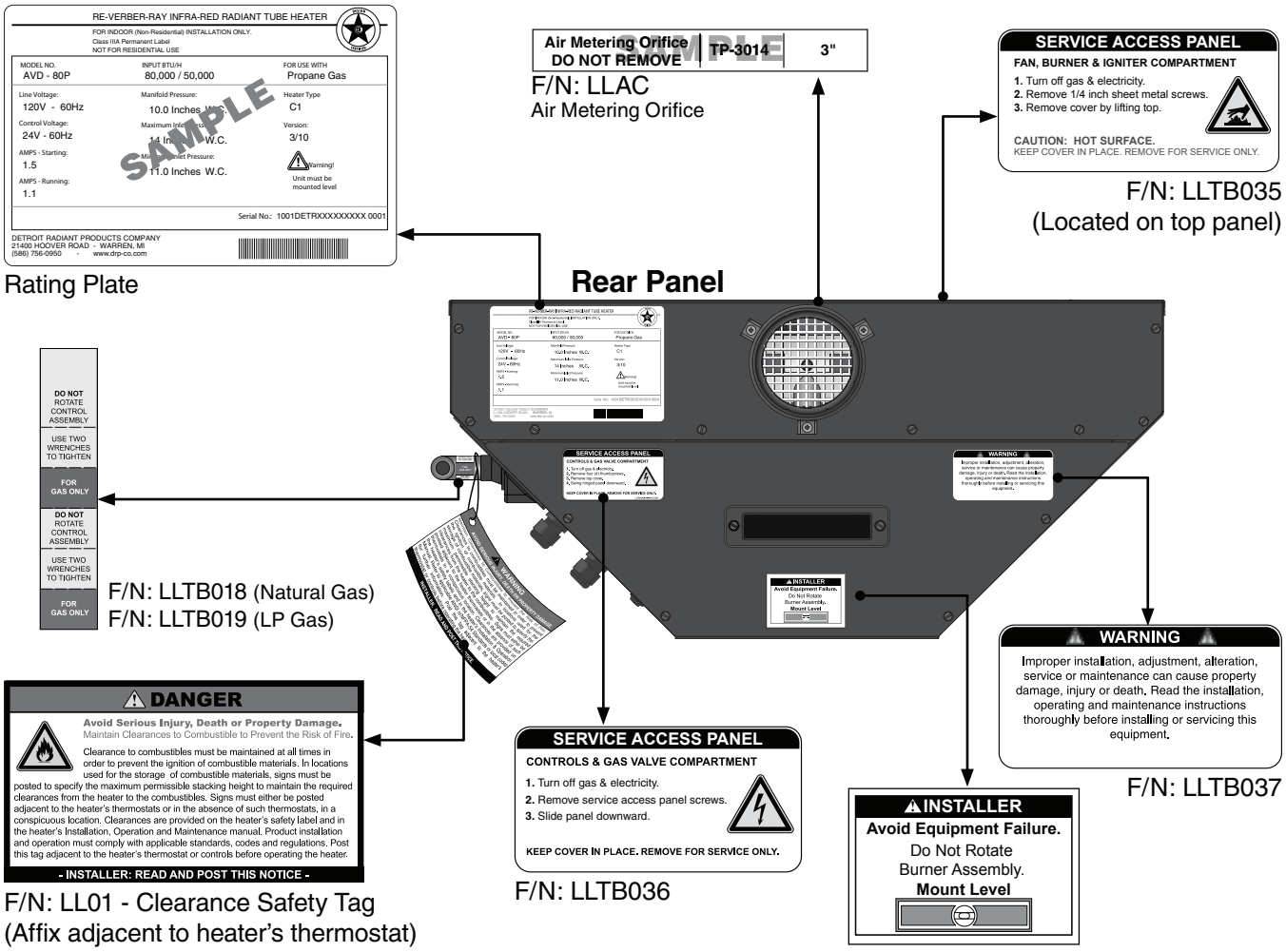

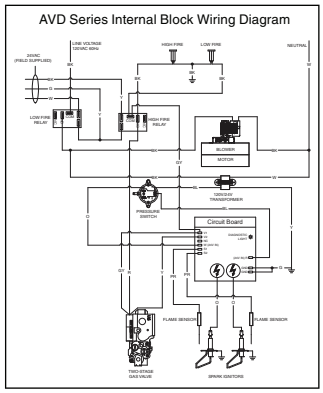

Electrical Label
(Located inside service panel)

F/N: LLLOGO11
Logo Label

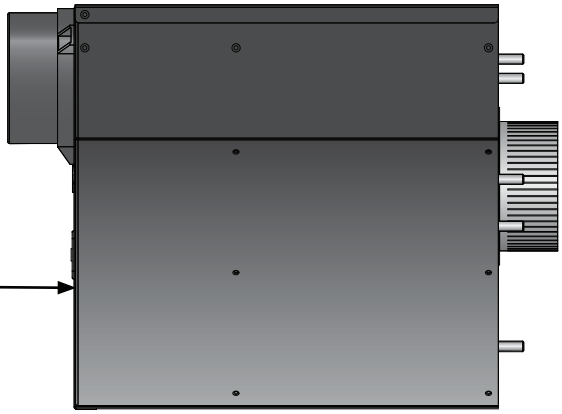

Right Panel

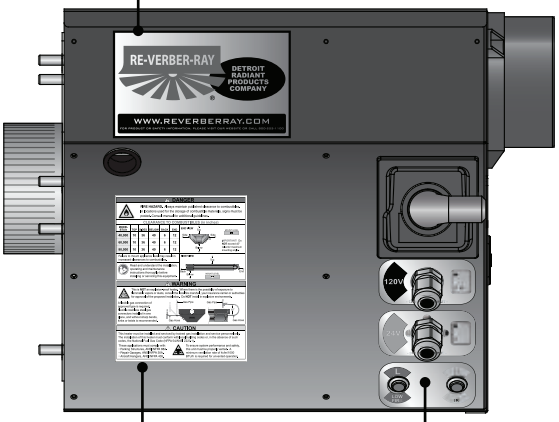

Left Panel

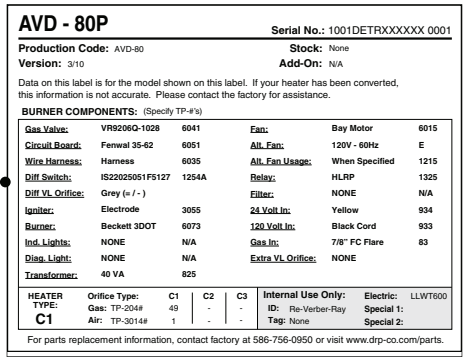

AVD - 80P **Serial No.:** 1001DETRXXXXXX 0001

Production Code: AVD-80 **Stock:** None
Version: 3/10 **Add-On:** N/A

Data on this label is for the model shown on this label. If your heater has been converted, this information is not accurate. Please contact the factory for assistance.

BURNER COMPONENTS: (Specify TP-#'s)

Gas Valve:	VR9206Q-1028	6041	Fan:	Bay Motor	6015
Circuit Board:	Fenwal 35-62	6051	Alt. Fan:	120V - 60Hz	E
Wire Harness:	Harness	6035	Alt. Fan Usage:	When Specified	1215
Diff Switch:	IS22025051F5127	1254A	Relay:	HLRP	1325
Diff VL Orifice:	Grey (= / -)		Filter:	NONE	N/A
Igniter:	Electrode	3055	24 Volt In:	Yellow	934
Burner:	Beckett 3DOT	6073	120 Volt In:	Black Cord	933
Ind. Lights:	NONE	N/A	Gas In:	7/8" FC Flare	83
Diag. Light:	NONE	N/A	Extra VL Orifice:	NONE	
Transformer:	40 VA	825			

HEATER TYPE:	Orifice Type:	C1	C2	C3	Internal Use Only:	Electric: LLWT600
C1	Gas: TP-204#	49	-	-	ID: Re-Verber-Ray	Special 1:
	Air: TP-3014#	1	-	-	Tag: None	Special 2:

For parts replacement information, contact factory at 586-756-0950 or visit www.drp-co.com/parts.

Burner Control Box Component Label
(located inside the service panel)

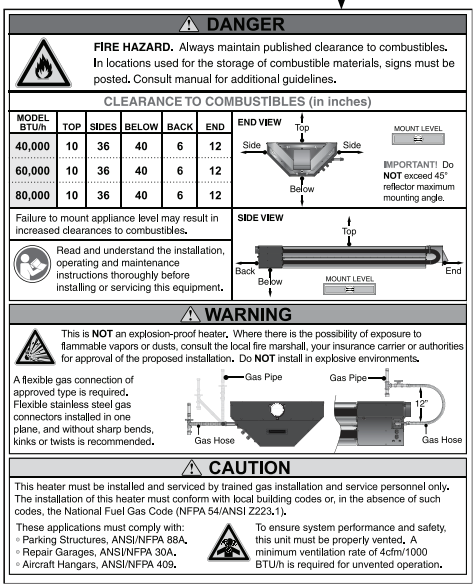

⚠ DANGER

FIRE HAZARD. Always maintain published clearance to combustibles. In locations used for the storage of combustible materials, signs must be posted. Consult manual for additional guidelines.

CLEARANCE TO COMBUSTIBLES (in inches)

MODEL BTU/h	TOP	SIDES	BELOW	BACK	END
40,000	10	36	40	6	12
60,000	10	36	40	6	12
80,000	10	36	40	6	12

END VIEW: Top, Side, Side, Below. MOUNT LEVEL. IMPORTANT! Do NOT exceed 45° reflector maximum mounting angle.

Failure to mount appliance level may result in increased clearances to combustibles.

Read and understand the installation, operating and maintenance instructions thoroughly before installing or servicing this equipment.

SIDE VIEW: Top, Back, Below, End. MOUNT LEVEL.

⚠ WARNING

This is **NOT** an explosion-proof heater. Where there is the possibility of exposure to flammable vapors or dusts, consult the local fire marshall, your insurance carrier or authorities for approval of the proposed installation. Do **NOT** install in explosive environments.

A flexible gas connection of approved type is required. Flexible stainless steel gas connectors installed in one plane, and without sharp bends, kinks or twists is recommended.

Gas Pipe, Gas Pipe, 12", Gas Hose, Gas Hose

⚠ CAUTION

This heater must be installed and serviced by trained gas installation and service personnel only. The installation of this heater must conform with local building codes or, in the absence of such codes, the National Fuel Gas Code (NFPA 54/ANSI Z223.1).

These applications must comply with:
- Parking Structures, ANSI/NFPA 88A.
- Repair Garages, ANSI/NFPA 30A.
- Aircraft Hangars, ANSI/NFPA 409.

To ensure system performance and safety, this unit must be properly vented. A minimum ventilation rate of 4cfm/1000 BTU/h is required for unvented operation.

F/N: LLTCL013: Clearance to
Combustibles and Gas Data Label

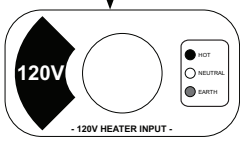

F/N: LLV3EP1

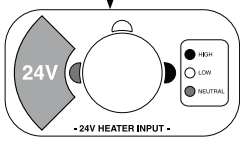

F/N: LLV3EP2

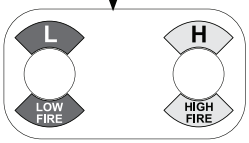

F/N: LLV2EP9

2.0 Safety

⚠ WARNING

Improper installation, adjustment, alteration, service or maintenance can cause property damage, serious injury or death. Read and understand, the installation, operating and maintenance instructions thoroughly before installing or servicing this equipment. Only trained, qualified gas installation and service personnel may install or service this equipment.

Warning Symbols

Safety is the most important consideration during installation, operation and maintenance of the radiant tube heater. You will see the following symbols and signal words when there is a hazard related to safety or property damage.

⚠ WARNING — **Warning** indicates a potentially hazardous situation which, if not avoided, could result in death or injury.

⚠ CAUTION — **Caution** indicates a potentially hazardous situation which, if not avoided, could result in minor or moderate injury.

NOTICE — **Notice** indicates a potentially hazardous situation which, if not avoided, could result in property damage.

⚠ CAUTION

Children and adults should be alerted to the hazards of high surface temperatures and should stay away to avoid burns or clothing ignition.

Young children should be carefully supervised when they are in the same space as the heater.

Clothing or other flammable materials should not be hung from the heater, or placed on or near the heater.

Any guard or other protective device removed for servicing the heater must be replaced prior to operating the heater.

Installation and repair should be done by a qualified service person. The heater should be inspected before use and at least annually by a qualified service person. More frequent cleaning may be required as necessary. It is imperative that the control compartment, air passageways and burner(s) of the heater be kept clean.

Applications

This is **not** an explosion proof heater. No radiant tube heater may be used in a Class 1 or Class 2 Explosive Environment. Consult your local fire marshall, insurance carrier and other authorities for approval if the proposed installation is in question.

Agricultural Applications

Unless otherwise indicated, radiant tube heaters are designed and certified for use in agricultural buildings, such as poultry houses, dairy parlors and swine houses. For maximum safety, the building must be evaluated for potential problems before installing the heating system. A critical safety factor to consider before installation is the clearance to combustibles.

⚠ WARNING

Not For Residential Use. Do not use this heater in the home, sleeping quarters, attached garages, etc. Installation of a commercial tube heater system in residential indoor spaces may result in property damage, serious injury or death.

Standards, Certifications and Government Regulations

Installation of this radiant tube heater must conform with all applicable local, state and national specifications, regulations and building codes. Contact the local building inspector and/or fire marshall for guidance.

In the absence of local codes, the installation must conform to the latest edition of:

United States: National Fuel Gas Code, ANSI Z223.1 (NFPA 54).

Canada: CAN/CGA B149.1 and .2, Canadian Electrical Code C22.1

Clearance to Combustibles

⚠ WARNING

Placement of explosive objects, flammable objects, liquids and vapors close to the heater may result in explosion, fire, property damage, serious injury or death. Do not store or use explosive objects, liquids and vapors in the vicinity the heater.

Common Hazards:
For maximum safety the building must be evaluated for hazards before installing the heating system. Examples include, but are not limited to:

- Gas and electrical lines
- Combustible and explosive materials
- Chemical storage areas
- Areas of high chemical fume concentrations
- Provisions for accessibility to the heater
- Adequate clearances around air openings
- Combustion and ventilating air supply
- Vehicle parking areas
- Vehicles with lifts or cranes
- Storage areas with stacked materials
- Lights
- Sprinkler heads
- Overhead doors and tracks
- Dirty or contaminated environments

A critical safety factor to consider before installation is the clearances to combustibles. **Clearance to combustibles** *is defined as the minimum distance you must have between the tube surface, or reflector, and the combustible item*. Considerations must also be made for moving objects around the radiant tube heater. The following is a partial list of items from which to maintain clearances:

Combustible/Degrading Items:

- Wood
- Paper
- Fabric
- Chemicals
- Paint
- Parked vehicles
- Gasoline
- Storage racks
- Tri-ply
- Vinyl banding
- Plastics
- Fogger lines
- Flexible gas lines
- Auger lines
- Feed pans/lines
- Drinker nipples/nylon lines

Moving Objects:

- Overhead doors
- Vehicles & vehicle lifts
- Cranes
- Hoists
- Catching machine
- Trailers

When installing the radiant heating system, the minimum clearances to combustibles for your series radiant tube heater and system configuration must be maintained. These distances are shown in Chart 2.1 on page 9 and on the burner control box. If you are unsure of the potential hazards, consult your local fire marshall, fire insurance carrier or other qualified authorities on the installation of gas fired radiant tube heaters for approval of the proposed installation.

In locations used for the storage of combustible materials, signs must be posted to specify the maximum permissible stacking height to maintain the required clearances from the heater to the combustibles. Signs must either be posted adjacent to the heater's thermostat or in a conspicuous location.

The stated clearance to combustibles represents a surface temperature of 90°F (32°C) above room temperature. Building materials with a low heat tolerance (such as plastics, vinyl siding, canvas, tri-ply, etc.) may be subject to degradation at lower temperatures. It is the installer's responsibility to assure that adjacent materials are protected from degradation.

⚠ WARNING

Failure to comply with the stated clearances to combustibles may result in personal injury, property damage and/or death.

Failure to mount the appliance level may result in personal injury, property damage and/or death.

Chart 2.1 • Clearance to Combustibles in Inches (see Figure 2.1)

Model Number	Top	Sides	Below	Back	End
AVD-60 [N, P]	10	36	40	6	12
AVD-80 [N, P]	10	36	40	6	12

Figure 2.1 • Clearance to Combustibles

SIDE VIEW

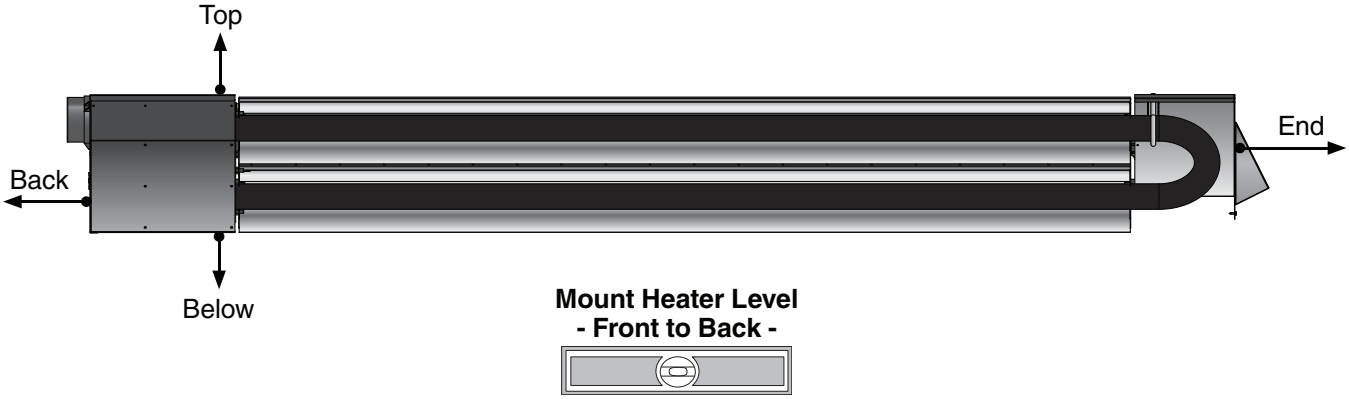

END VIEW

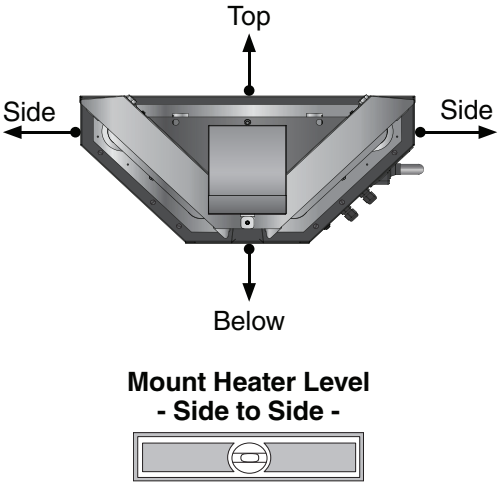

BACK VIEW Showing Pitched Roof Installation

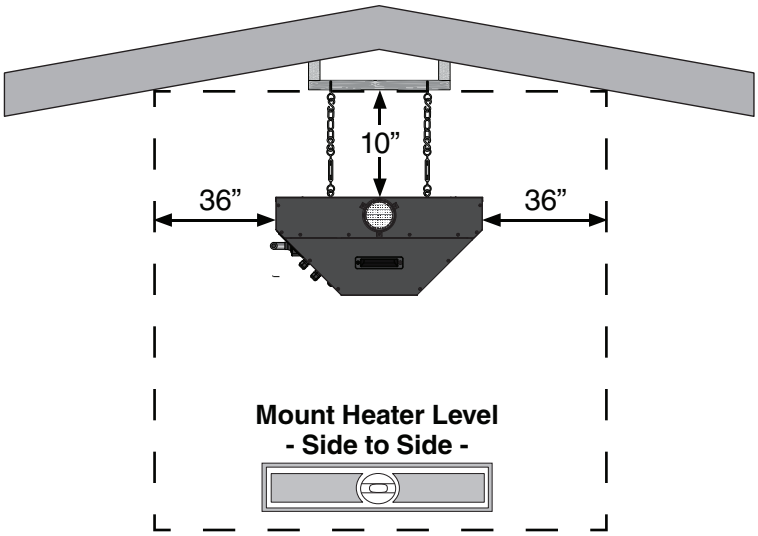

3.0 Installation

⚠ WARNING

Improper installation, adjustment, alteration, service or maintenance can cause property damage, serious injury or death.

Read and understand, the installation, operating and maintenance instructions thoroughly before installing or servicing this equipment.

Only trained, qualified gas installation and service personnel may install or service this equipment.

Design Considerations and Prechecks

Placement of infrared heaters is influenced by many factors. Aside from safety factors, considerations such as the number of heater or vent elbows that are allowed, maximum vent lengths, ducting of combustion air and combining exhaust vents are a few examples. All installation manuals, along with national, state, provincial and local codes, address these issues. It is critical that you read, understand and follow all guidelines and instructions.

To ensure a properly designed heating system, a layout should be developed for the correct placement of the heating appliance, vents and combustion air intake ducts. Inspect and evaluate the mounting conditions, vent locations, gas supply and wiring. Refer to Chart 3.1 on page 11 for the recommended mounting heights and coverages for the model being installed.

The effective infrared surface temperature of a person or object may be diminished with wind above 5 mph. The use of adequate wind barrier(s) may be required.

NOTE: When heated, materials high in hydrocarbons (solvents, paint thinner, mineral spirits, formaldehydes, etc.) can evaporate. This may result in odors or fumes being emitted into the environment. To correct this problem, clean the area and/or introduce additional ventilation. Heaters installed and serviced in accordance with the installation manual do not emit odors into the environment.

IMPORTANT: Fire sprinkler heads must be located at an appropriate distance from the heater. This distance may exceed the published clearance to combustibles as posted on the heater. Certain applications may require the use of high temperature sprinkler heads or relocation of the heaters.

⚠ CAUTION

Sprinkler systems containing propylene glycol or other flammable substances are not to be used in conjunction with this heater without careful consideration for and avoidance of potential fire or explosion hazards. For further information consult NFPA 13.

Chart 3.1 • Recommended Mounting Heights and Coverages

Model No.	Input BTU/h	Recommended Mounting Height (ft.)	Approximate Coverage Area (LxW)
AVD-60 [N,P]	60,000	6 to 8	24 x 28
AVD-80 [N,P]	80,000	6 to 9	26 x 32

NOTE: This chart is provided as a guideline. Actual conditions may dictate variation from this data.

*Factory recommended mounting heights and approximate coverages are listed as a guideline for designing for total building heat. However, certain applications such as spot heating, freeze protection and outdoor heating generally require additional heat per square foot to comfortably heat these areas. Clearances to Combustibles must always be maintained (Chart 2.1; Page 9).

Figure 3.1 • Application Guidelines

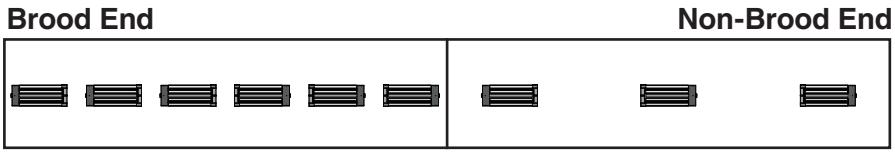

For houses 400 feet long by 40 to 50 feet wide

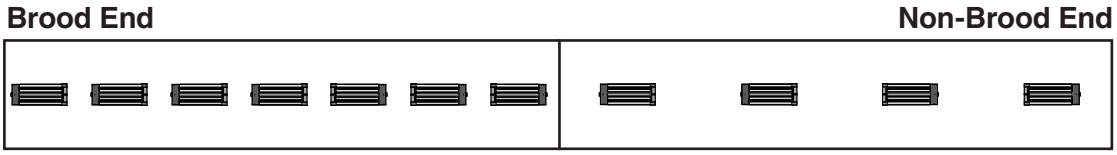

For houses 500 feet long by 40 to 50 feet wide

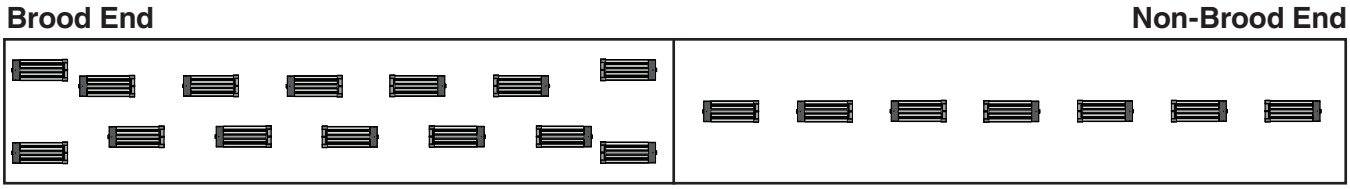

For houses 600 feet long by 50 to 66 feet wide

Chart 3.2 • Heater Spacing**

House Length	House Width		Approx. Distance from End Wall and from Curtain	Approx. Distance Between Heaters
400 Feet	40 to 50 Feet	Brood End	10-20 Feet	31-37 Feet
		Non-Brood End	35-45 Feet	57-63 Feet
500 Feet	40 to 50 Feet	Brood End	10-20 Feet	34-40 Feet
		Non-Brood End	30-40 Feet	57-63 Feet
600 Feet	50 to 66 Feet	Brood End	10-20 Feet	46-52 Feet
		Non-Brood End	25-35 Feet	37-43 Feet

** Layouts may vary depending on house style, size and climate.

Heater Packaging

Heaters are made up of three pieces shipped in two boxes; the burner control box in the first box and the emitter assembly and reflectors in the second box (see Figure 3.2).

Figure 3.2 • Heater Packaging • 2 Pieces

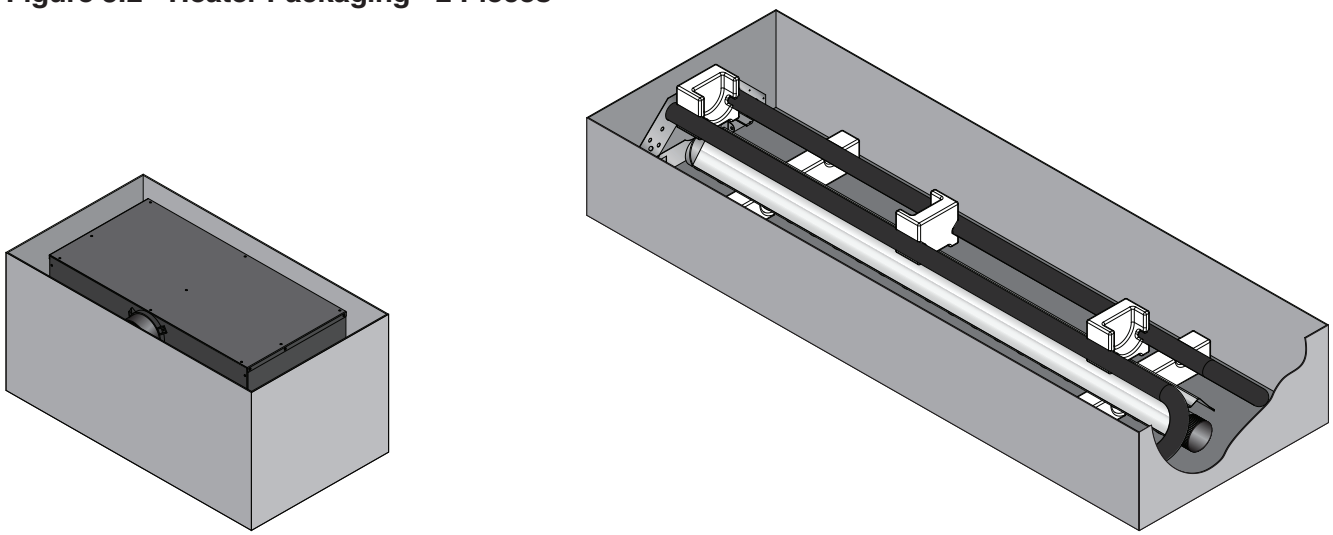

Burner Control Box

Emitter Assembly and Reflector Box

⚠ WARNING

Improper suspension of the radiant tube heater may result in collapse and being crushed. Always suspend from a permanent part of the building structure that can evenly support the total force and weight of the heater.

Failure to maintain minimum clearance to combustibles may result in fire and/or explosion, property damage, serious injury or death. Always maintain minimum clearances and post clearance safety limit signs or the clearance safety tag where needed.

Chart 3.3 • Heater Mounting Requirements and Weights

Model	Overall Unit Length	Suspension Points	Shipping Weight	Chain Set Qty.
AVD-60 [N,P]	106”	3 or 4	103 lbs.	3
AVD-80 [N,P]	106”	3 or 4	103 lbs.	3

Shipping Dimensions:
B = Burner Control Box (15#) & (31.5”L x 17.5”W x 15.5”H)
T = Emitter Assembly and Reflector Box (88#) & (91”L x 31”W x 14”H)

NOTE: See Kit Contents on page 44.

Heater Assembly

Assembly prior to hanging: With this method, the use of two saw horses or a raised table or bench surface is beneficial (the emitter assembly and reflector box may also be used).

❶ Lay the emitter assembly (TP-6082) across the horses or bench with the exchanger connection hanging bracket extended out over the edge (See Detail 'A') **NOTE:** Use of the foam shipping blocks will help protect the emitter coating and reflectors.

❷ Install the tube flange gaskets (TP-6021B) onto the corresponding studs on the burner control box.

❸ Align the nine (9) burner control box studs with the eight (8) holes located on the emitter plates and the one (1) hole on the exchanger connection hanging bracket.

❹ Install nine (9) 5/16 - 18 keps nuts provided, tightening evenly and torque to 20 ft-lb.

Reflector Sub-Assembly

❶ On a flat surface, lay out two reflectors (TP-6088) parallel to each other.

❷ Place U-end reflector end cap (TP-6084A) at one end and burner reflector end cap (TP-6085A) at the opposite end with the "over/under tabs" facing the reflector.

❸ Move the reflector end caps into the reflector ends while aligning the "over tabs" (larger tabs with holes) over the top of the reflector and the "under tabs" (smaller tabs with no holes) under the reflector (see Detail B). This can be achieved by squeezing the reflector slightly to fit within the end cap.

❹ Properly secure reflector end caps to reflectors using #8-1/2" screws (TP-62) through the hole into the reflector, being careful not to strip.

❺ Repeat process with the remaining two reflectors.

Figure 3.3 • Heater Assembly

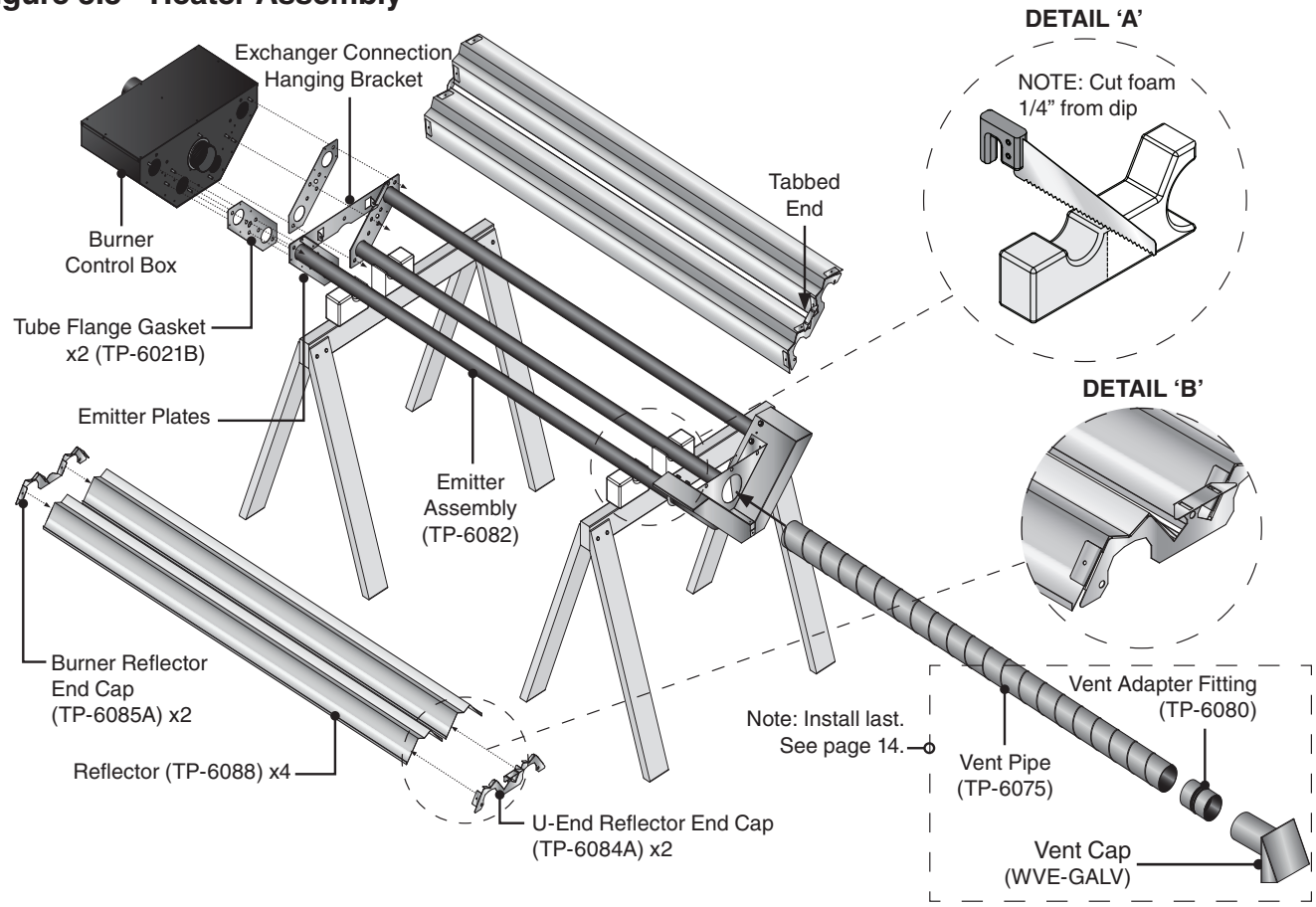

Installing the Reflector Assembly

NOTE: Prior to installing the reflector, relocate the saw horses to support the burner control box and the tubes beneath the u-end reflector.

❶ Align the reflector end cap holes (2) with the corresponding burner control box studs (see Detail 'C'-Step 1). **NOTE:** Do not remove the existing nuts on studs.

❷ Lower the U-end reflector end cap (TP-6084A) down over the tubes while shifting the reflector assembly towards the burner control box. (see Detail 'C'-Step 2).

❸ Secure burner reflector end cap (TP-6085A) with (2) 5/16"-18 keps nuts (see Detail 'D'). Note: The burner reflector end cap does not have a tab with slots.

❹ Secure the U-end reflector end cap using the red shoulder screws (TP-6086A) provided (see Detail 'E').

❺ Repeat process with remaining reflector assembly.

Venting Installation

❶ Insert vent adapter (TP-6080) into vent pipe (TP-6075) and secure with (3) #8 sheet metal screws (provided).

❷ Install venting assembly and secure to vent outlet with (3) #8 sheet metal screws (provided) (See Detail 'C'-Step 3). See page 18 for additional venting requirements.

Figure 3.4 • Final Heater Assembly

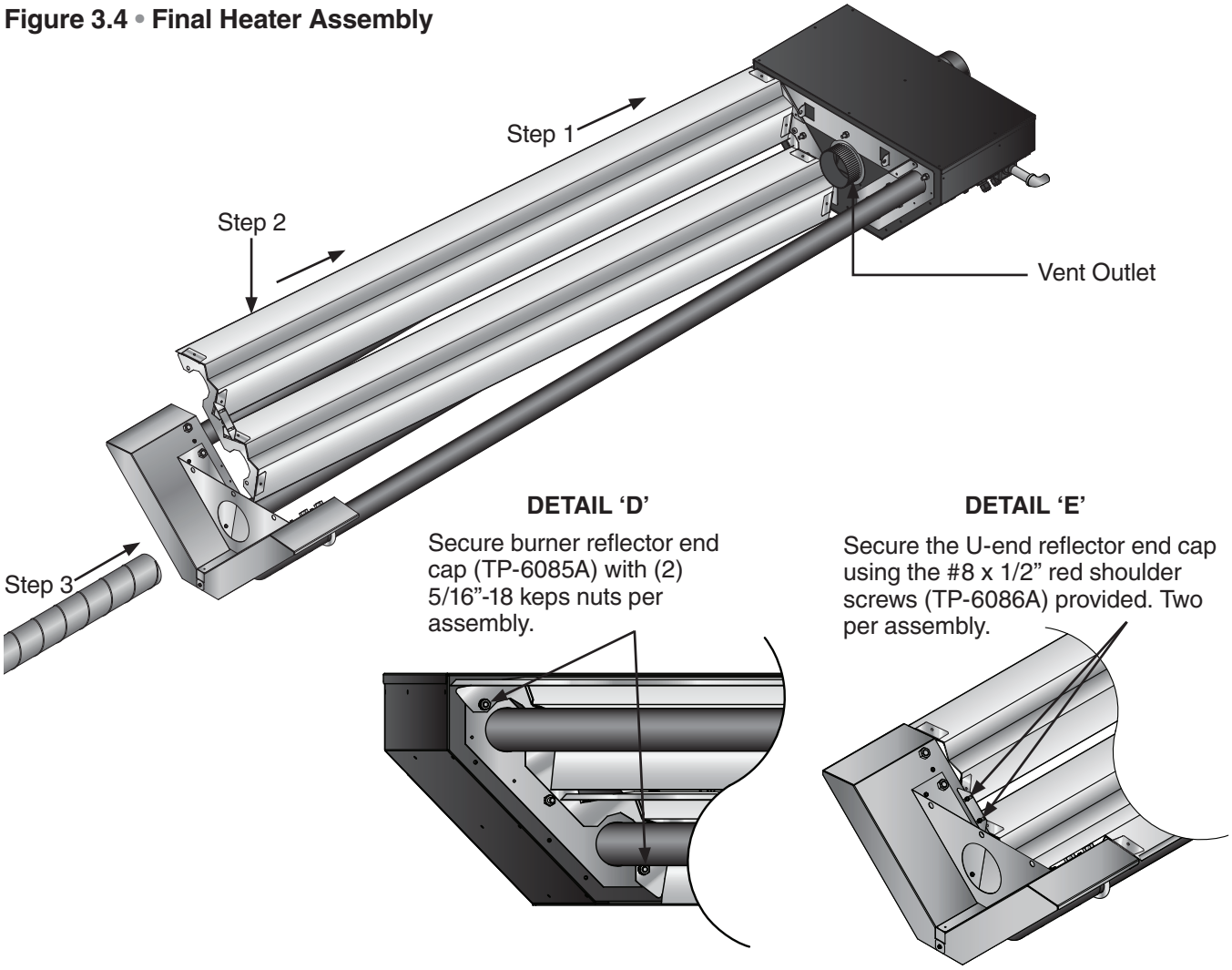

Preparing Points for Hanging

❶ Transfer the heater's three hanging locations to the ceiling where the unit is to be installed and mark hanging points.

❷ Prepare mounting surface. If necessary attach additional support blocks and drill holes (Figure 3.5).

❸ Fasten beam clamp, screw hook or other type of suspension anchor to hanging point.

❹ Attach and close S-hook (P/N: S-HOOK) and #1 double-loop chain (P/N: AV-CS) to anchor. Check that it is securely attached. **NOTE**: Threaded rod and turnbuckles may be used.

NOTE: The unit must be in straight alignment and level. Adjust chain lengths until radiant tubing is level and equal weight distribution is achieved. Chains must be straight up and down. Do not install chains at an angle as this can result in tube warpage or separation.

Figure 3.5 • Hanging Types

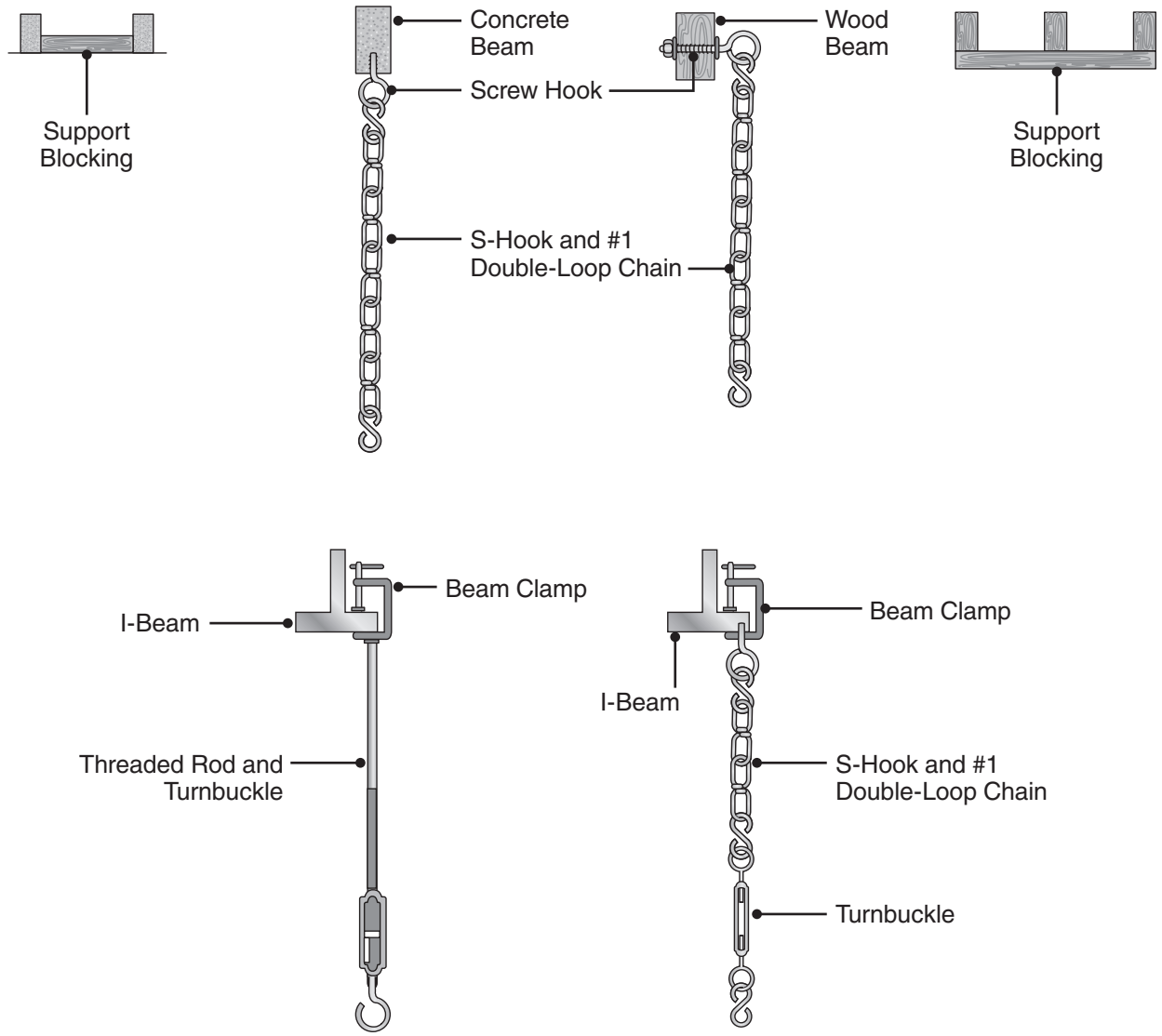

Hanging Pre-Assembled Unit

❶ Raise the assembled unit from assembly station to prepared hanging location. **NOTE:** This can be done manually or with a winch system.

❷ Attach two chains to exchanger connection hanging bracket (TP-6079). Secure S-hooks.

❸ Attach the third chain located furthest from the gas and electrical connections to the reflector end assembly (TP-6089A) and secure S-hook.

❹ Raise or lower the unit to desired mounting height.

Figure 3.6 • Hanging the Heater

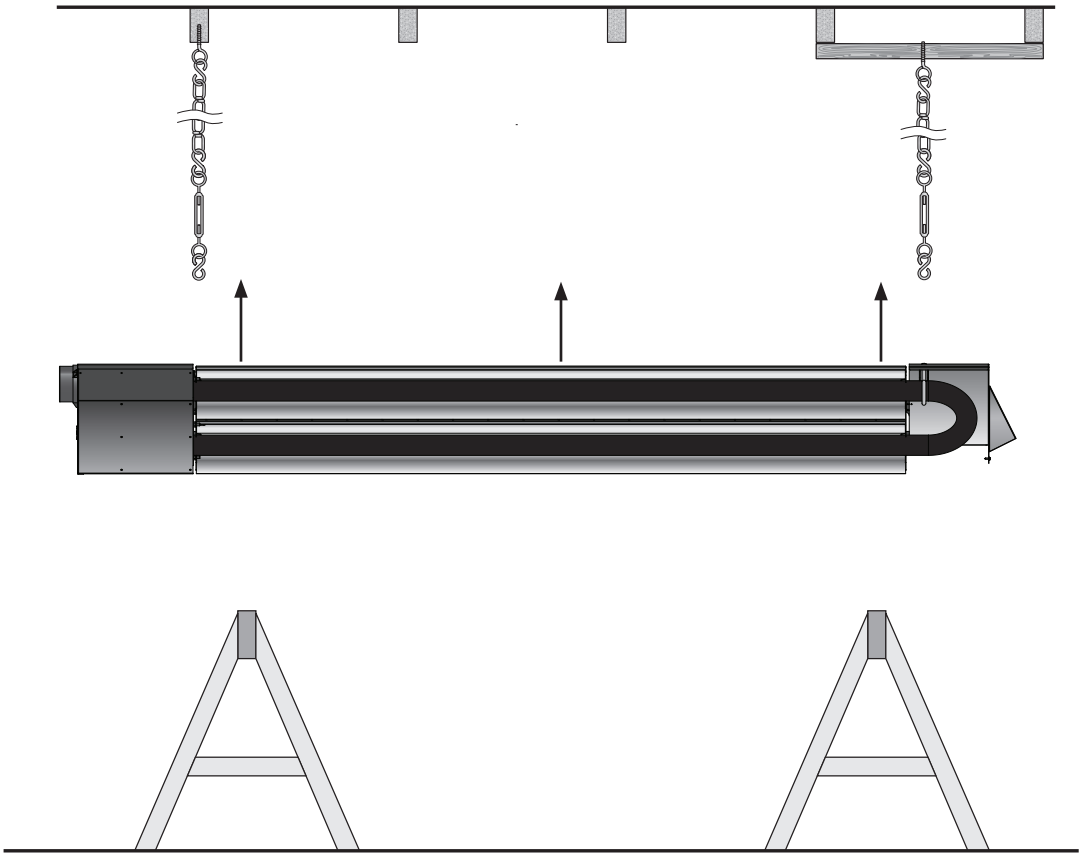

Figure 3.7 • Hanging the Heater (Side View)

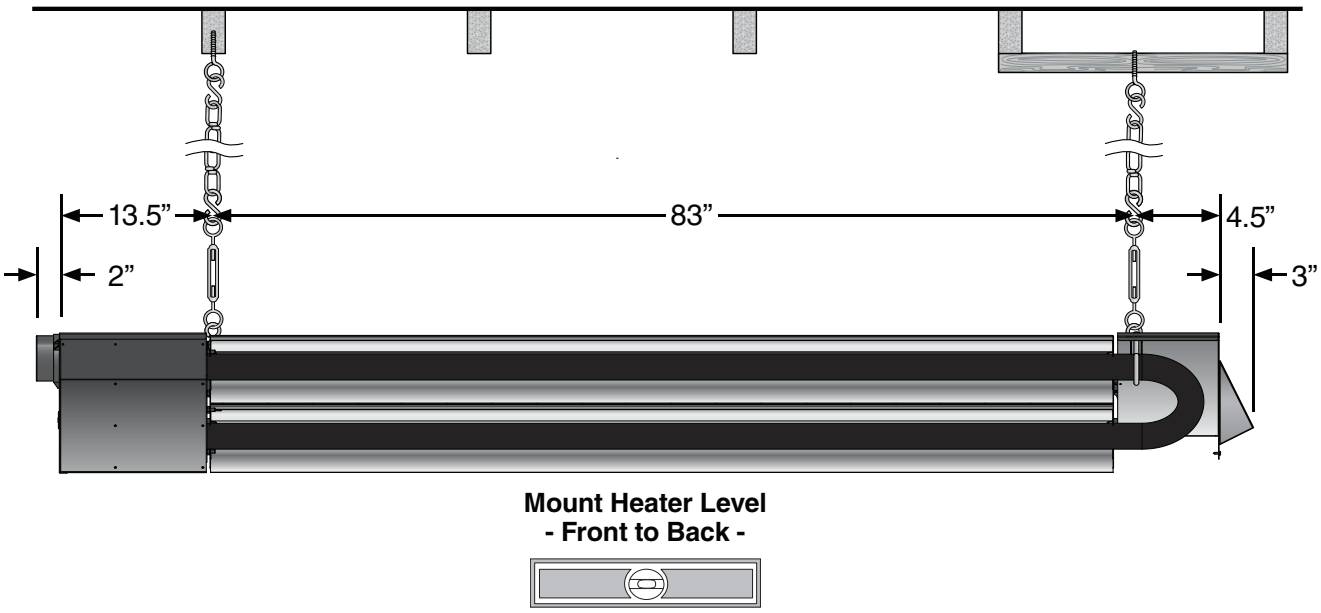

Figure 3.8 • Hanging the Heater
(Burner Box Back View)

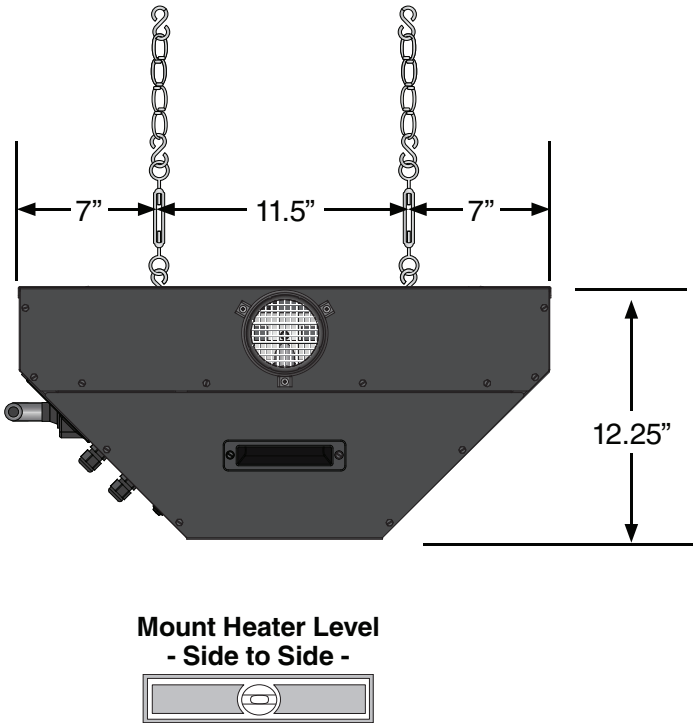

Figure 3.9 • Hanging the Heater
(Exhaust End View)

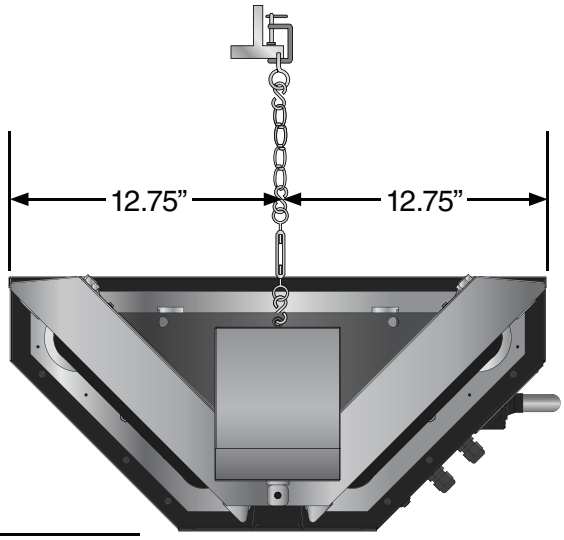

Final Check List

❶ Check the unit for level across the length (Figure 3.7).

❷ Check the unit for level across the width (Figure 3.8).

Venting

⚠ WARNING

Insufficient ventilation and/or improperly sealed vents may release gas into the building which could result in health problems, carbon monoxide poisoning or death.

Improper venting may result in fire, explosion, injury or death.

Seal vent pipes with high temperature sealant and three (3) #8 sheet metal screws. Vent enclosed spaces and buildings according to the guidelines in this manual and applicable national, state, provincial and local codes.

This radiant tube heater must be vented in accordance with the requirements within this manual and all applicable codes for all models, prior to operating unit. Local codes may vary.

In the absence of local codes:

United States: Refer to NFPA 54/ANSI Z223.1 (latest edition), National Fuel Gas Code.
Canada: Refer to CAN/CGA B149.1 and B149.2 Installation Codes for Gas Burning Appliances.

The heating system may operate either vented or unvented. Venting can terminate through the sidewall (horizontal) or the roof (vertical) and be individually or commonly vented.

Venting Requirements

- 4 in. single wall 26 gauge (min.) galvanized steel vent pipe or Dura/Connect single wall flexible exhaust vent must be used.
- Maximum vent length for all models is 30 ft. (9 m).
- Single wall galvanized vent pipe must be insulated in cold environments.
- Seal single wall vent with high temperature sealant (field supplied)and three (3) #8 sheet metal screws (field supplied).
- Do not use more than two (2) 90° elbows in the exhaust vent.
- To maintain clearances to combustibles, the use of an approved wall or roof thimble and double-wall Type B-vent is required for the portion of vent pipe that runs through combustible material in the building wall or roof (see Figures 3.11 - 3.14).
- Consult the NFPA ANSI Z223.1 Gas Vent Termination criteria if roof pitch exceeds 9:12.

Unvented Operation

⚠ WARNING

Not for residential use. The use of unvented radiant tube heaters in residential indoor spaces may result in property damage, serious injury or death. Use unvented operation in commercial and industrial installations with proper ventilation rates only.

When using an unvented configuration (agricultural use only)**, consider the following:**

- A factory supplied vent cap/diffuser (P/N: WVE-GALV) **must** be used.
- Where unvented heaters are used, natural or mechanical means **must** be provided to supply adequate ventilation - a minimum of 4 cfm/1000 BTU/h (0.38 m^3/kW) input of installed heaters.

NOTE: Gravity or mechanical means may be used to accomplish the air displacement. Local codes may require that the mechanical exhaust system be interlocked with the electrical supply line to the heaters, enabling both to function simultaneously.

- Exhaust openings for removing the flue products must be located above the level of the heater(s).

Figure 3.10 • Minimum Clearances

Sidewall Venting

Guidelines:

Vent Pipe Angle

- To prevent moisture from entering the heater system, slope the vent pipe downward toward the outlet 1/4 in. per foot of length. **Do not** pitch the heater.
- **Vent must extend beyond any combustible overhang if the vent is less than 36 in. below the combustible overhang.

Figure 3.11 • Sidewall Venting Requirements

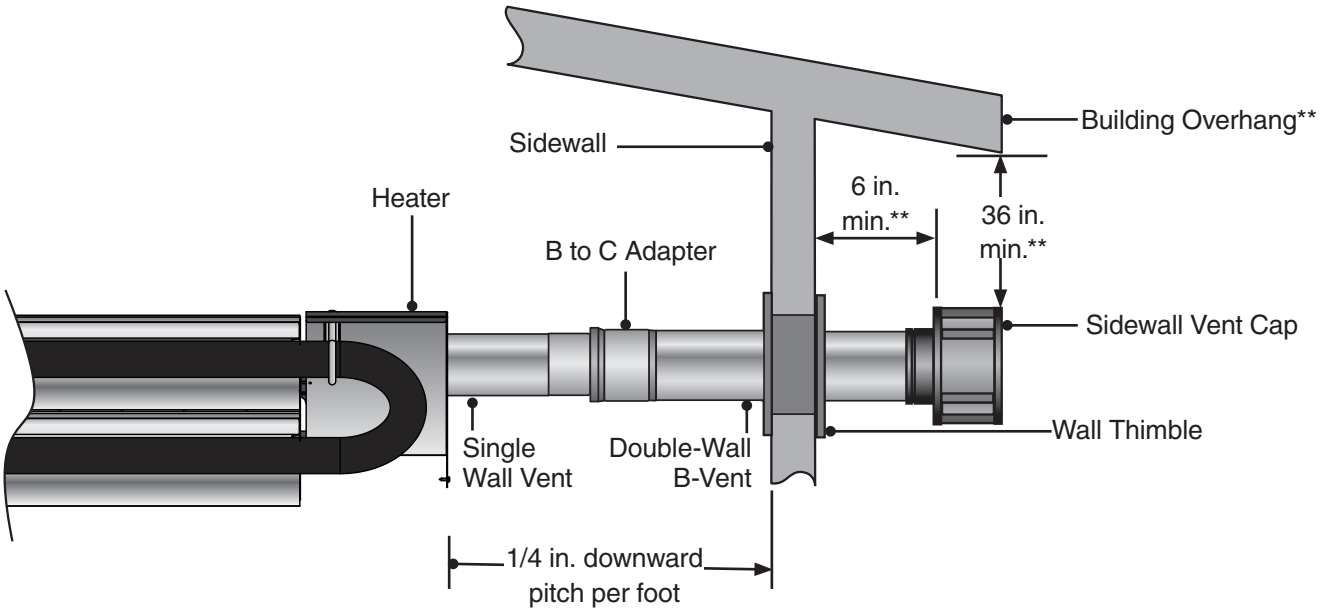

Vent Termination

United States:

- Vent must terminate a minimum of 4 ft. (1.2 m) below, 4 ft. (1.2 m) horizontally from, or 1 ft. (30 cm) above any window or door that may be opened or gravity air inlet into the building.
- Vent must terminate a minimum of 3 ft. (.9 m) above any forced air inlet that is located within 10 ft. (3.1 m).
- The bottom of the vent terminal must be located a minimum of 12 in. (30 cm) above grade level and must extend beyond any combustible overhang. Vents adjacent to public walkways must terminate a minimum of 7 ft. (2.1 m) above grade level.
- The vent terminal must be installed to prevent blockage by snow and protect building materials from degradation by flue gases.
- The vent cap must be a minimum of 6 in. (15.2 cm) from the sidewall of the building.
- Vent must be a minimum of 36 in. below or extend beyond any combustible overhang.

Canada:

- Vents must terminate a minimum of 3 ft. (.9 m) from a window or door that may be opened, and non-mechanical air supply inlet or combustion air inlet into the building.
- Vents must terminate a minimum of 6 ft. (1.8 m) from a mechanical air supply inlet.

Rooftop Venting

Guidelines:

Vent Locations and Clearances

- Separate air intake duct from vent pipe a minimum of 4 ft. (1.2 m) by placing vent pipes higher than adjacent air intake duct.
- Venting may utilize standard B-vent cap.
- The vent terminal must extend a minimum of 2 ft. (.6 m) above the roof.

Figure 3.12 • Rooftop Venting - Side View

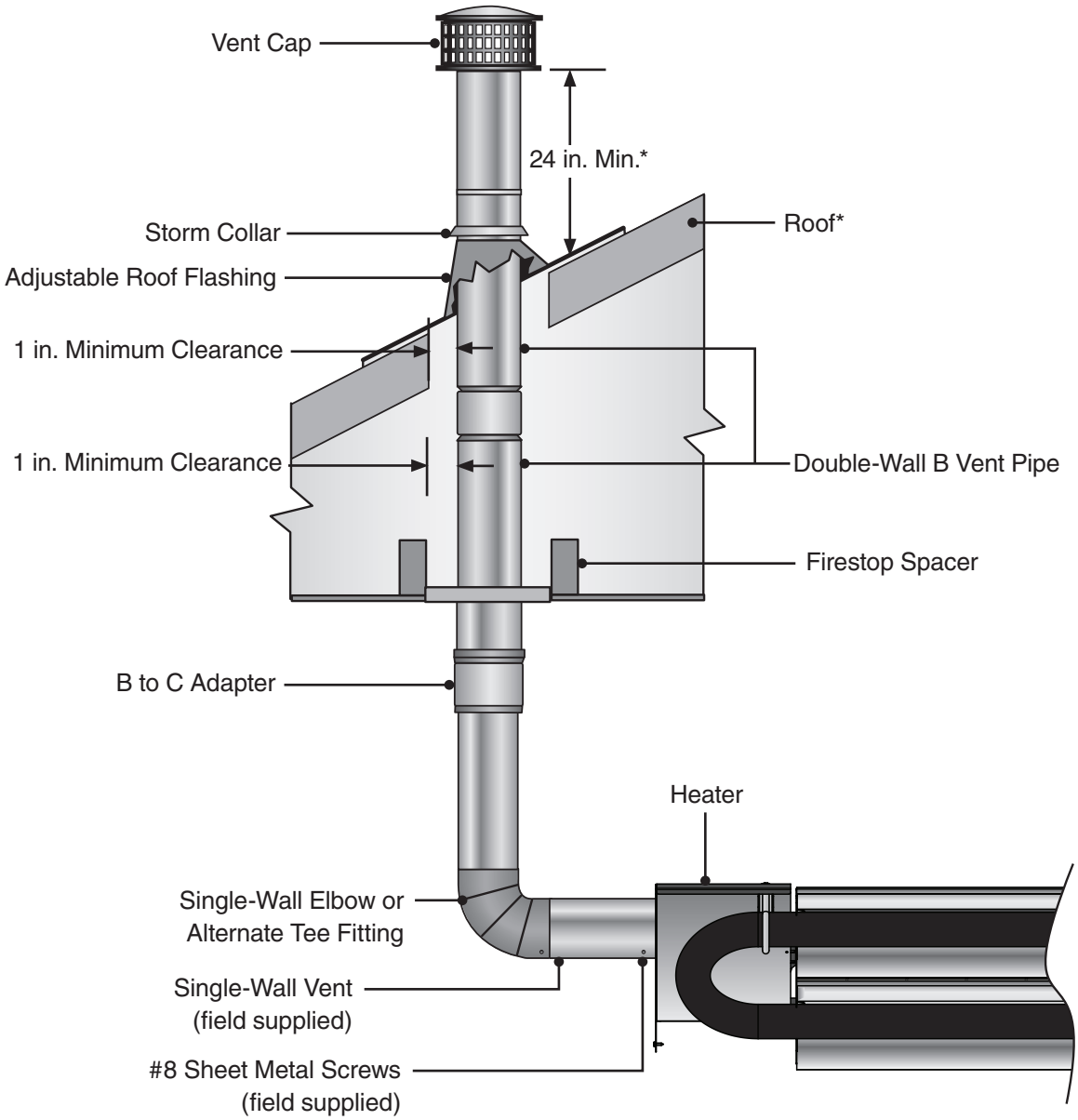

*Consult the NFPA ANSI Z223.1 Gas Vent Termination criteria if roof pitch exceeds 9:12.

Common Venting

- When joining two heaters to a common vent, a staggered arrangement or a dual exhaust assembly (P/N: YSM) must be used so that by-products of one heater do not flow into the adjoining vent of the other heater.
- 6 in. diameter double-wall Type B-vent and 6 in. vent cap must be used.
- Common vented heaters **must be** controlled with the same thermostat. **Do not operate individually**.

Figure 3.13 • Common Rooftop Venting - Side View

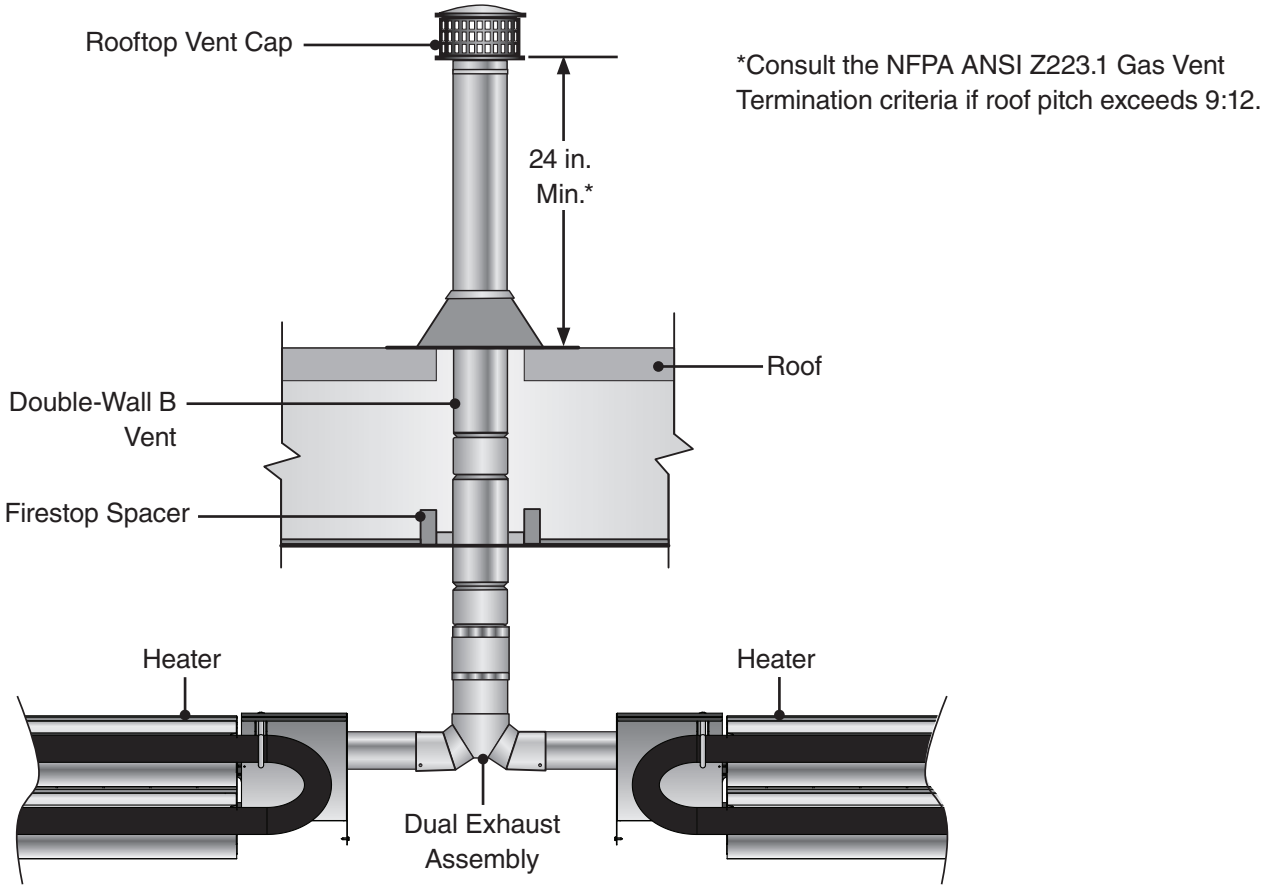

Figure 3.14 • Common Sidewall Venting - Top View

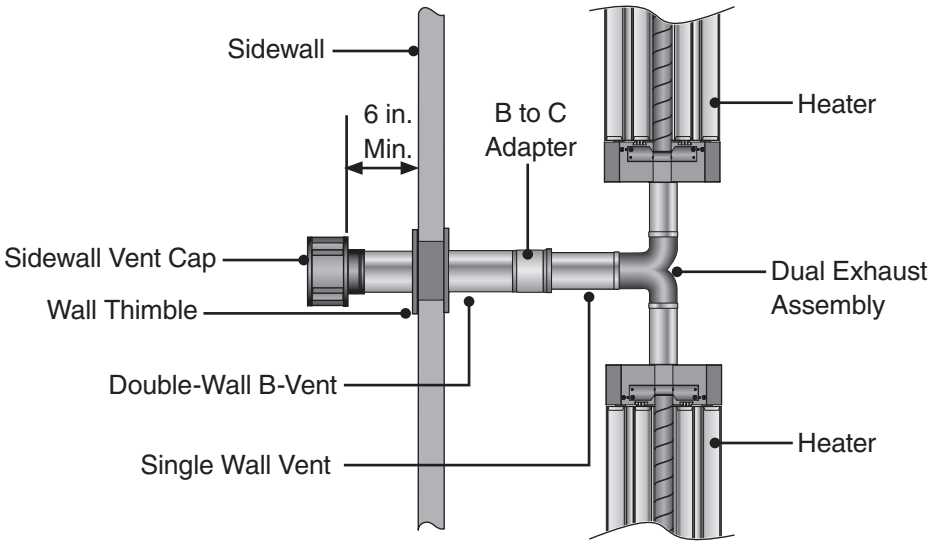

Combustion Air Requirements

Combustion air may be supplied to the heater by indoor or outdoor means.

If using combustion air intake from indoors, the required volume of the space must be a minimum of 50 ft^3 per 1000 BTU/h (4.8 m^3/kW) unless the building is of unusually tight construction. If the building is of unusually tight construction with air infiltration rates of less than 0.40 air changes per hour, outside combustion air is typically needed unless the sheer size of the building allows otherwise. Contact the factory for further determination of air infiltration rates.

Non-contaminated outside air for combustion must be ducted to the heater if any of the following apply:

- Chemicals such as chlorinated or fluorinated hydrocarbons (typical sources are refrigerants, solvents, adhesives, degreasers, paints, paint removers, lubricants, pesticides, etc.).
- High humidity.
- Contaminants such as sawdust, welding smoke, etc.
- Negative building pressure.
- Unusually tight construction where there is an air infiltration rate of less the 0.40 air changes per hour.

Combustion air intake may be located on either the sidewall or roof (see figures 3.15 - 3.18).

Figure 3.15 • Vertical Outside Air Supply for Single Heater Intake • Side View

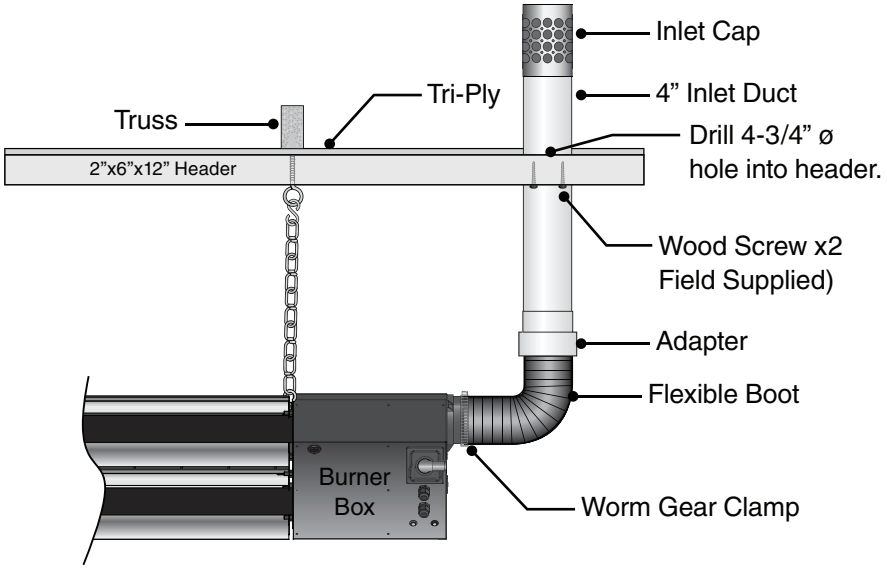

Figure 3.16 • Optional Vertical Outside Air Supply for Single Heater Intake • Side View

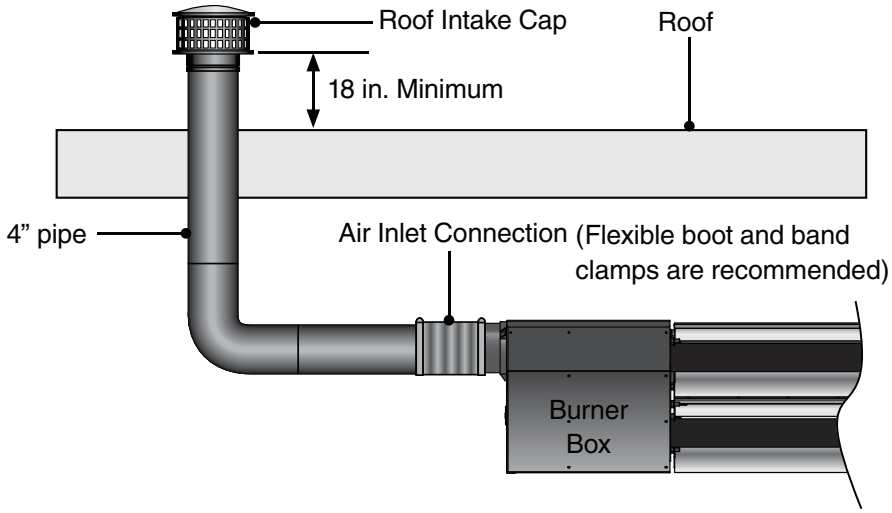

Figure 3.17 • Horizontal Outside Air Supply for Single Heater Intake • Side View

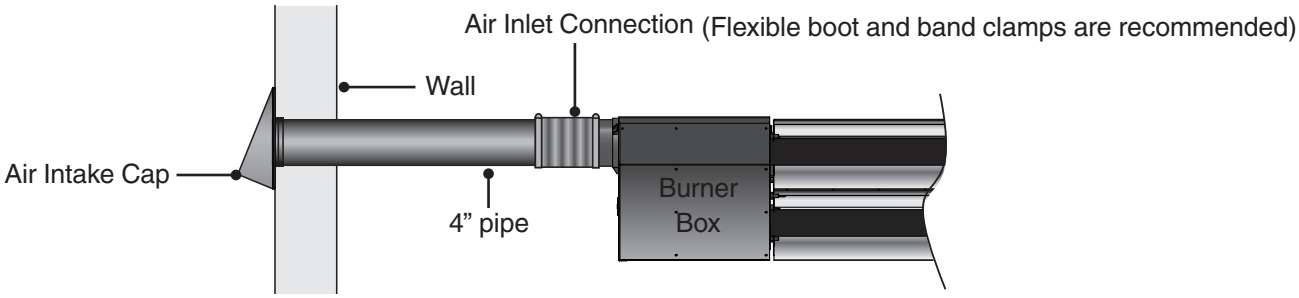

Figure 3.18 • Vertical Outside Air Supply for Common Heater Intake • Side View

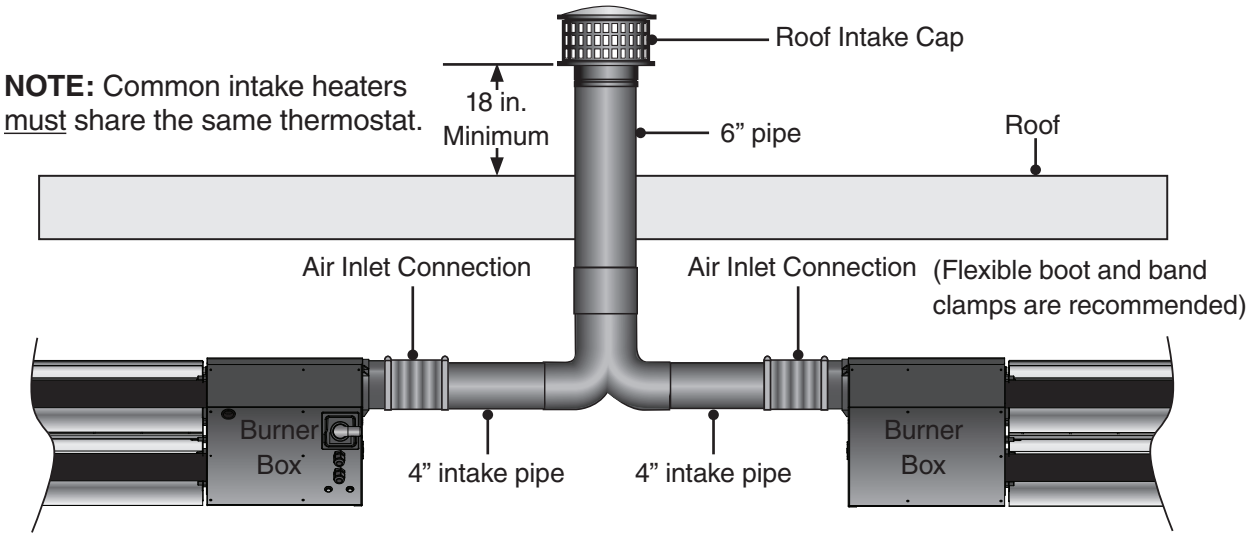

Guidelines:

Chart 3.4 • Limitations for Length and Size of Combustion Air Intake Duct

Single Heater Intake		Dual Heater Intake	
Air Intake Duct Size	Max. Intake Length	Duct Size	Max. Intake Length
4 in.	20 ft.	4 in.(single)/6 in.(dual)	20 ft.
5 in.	30 ft.	4 in.(single)/8 in.(dual)	30 ft
6 in.	40 ft.	Consult factory for longer intake lengths.	

General

- No more than two (2) 90° degree elbows are allowed.
- Allow for expansion. Use a 4 in. flexible hose to connect the duct to the burner control box.
- In humid environments, use insulated duct, PVC pipe or DWV (drain waste vent) to prevent condensation on the outer surface.
- A factory approved wall intake cap (P/N: WIV-4) must be used with horizontal outside intake ducts. The wall intake cap (P/N: WIV-4) must be installed to prevent blockage. Locate the intake where dirt, steam, snow, etc. will not contaminate or clog the intake screen.
- Separate air intake duct from vent pipe a minimum of 4 ft. Also, place vent pipe higher than adjacent air intake duct.

Gas Supply

⚠ WARNING

Improperly connected gas lines may result in fire, explosion, poisonous fumes, toxic gases, asphyxiation or death. Connect gas lines in accordance to national, state, provincial and local codes.

IMPORTANT! Before connecting the gas supply to the burner control box:

- Verify that the heater's gas type (as listed on the rating plate) matches that of your application.
- Check that the gas piping and service has the capacity to handle the total gas consumption of all heaters being installed, as well as any other gas appliances being connected to the supply line.
- Check that the main gas supply line is of proper diameter to supply the required fuel pressures.
- If utilizing used pipe, verify that its condition is clean and comparable to a new pipe. Test all gas supply lines in accordance with local codes.
- Test and confirm that inlet pressures are correct. Refer to the heater rating plate for gas type and the required minimum and maximum pressures (see Chart 3.5). The gas supply pipe must be of sufficient size to provide the required capacity and inlet pressure to the heater (if necessary, consult the local gas company). Do not exceed the maximum allowed pressures for the heater, the space or the gas piping system.

Chart 3.5 • Manifold Pressure

Type of Gas	Required Manifold Pressure	Minimum Inlet Pressure	Maximum Inlet Pressure
Natural	3.5 Inches W.C.	5.0 Inches W.C.	14.0 Inches W.C.
Liquefied Propane	10.0 Inches W.C.	11.0 Inches W.C.	14.0 Inches W.C.

NOTE: Check manifold pressure at the tap on the gas valve. Small variations in manifold pressure (actual vs. published) may exist due to changing atmospheric conditions. Readings will be above atmospheric pressure.

Pressure Equivalents: 1 Inch W.C. equals .058 oz/sq. in. equals 2.49 mbar.

To connect the gas:

⚠ WARNING

Failure to install, operate or service this appliance in the approved manner may result in property damage, injury or death. Only trained, qualified gas installation and service personnel may install or service this equipment.

The installation must conform with local building codes or, in the absence of such codes, the National Fuel Code (NFPA 54) and in conjunction with ANSI Z21.24/CSA 6.10 “Connectors for Gas Appliances”.

IMPORTANT! The heating system will expand and contract during operation. **Allowances for expansion must be made between the connection to the heater and the gas supply.** Excessive bending, kinks, twists or vibration must be avoided. A flexible gas connection of approved type is required. Flexible stainless steel gas connectors, or other approved connection device, installed in one plane, and without sharp bends, kinks or twists is recommended.

The gas pipe and connection **must** be supported independently. Do not install gas supply line in a manner that bears the weight of the heater. Connect the main gas supply line with an approved flexible connector (Figure 3.19) or, if national or local codes require rigid piping, a swing joint. Heater **shall not be** connected to the building piping system with rigid pipe or semi-rigid metallic tubing, including **copper**. When using such material, an intermediate connection device that allows for heater expansion must be used.

The gas outlet must be in the same room as the appliance and accessible. It may not be concealed within or run through any wall, floor or partition. When installing the heater in a corrosive environment (or near corrosive substances), use a gas connector suitable for the environment. Do not use the gas piping system to electrically ground the heater.

❶ Install a sediment trap / drip leg if condensation may occur at any point of the gas supply line. This will decrease the possibility of loose scale or dirt in the supply line entering the heater’s control system and causing a malfunction. **NOTE:** High pressure gas above 14 Inches W.C. (water column pressure) requires a high pressure regulator and ball valve.

❷ Form the approved flexible connector (field supplied) into a smooth C-shape allowing 12 in. between the flexible connector’s end nuts (see Figures 3.19-3.20).

❸ Attach the ball valve (field supplied) to the gas supply pipe. Apply pipe compound to NPT adapter threads to seal the joint. Use only a pipe compound resistant to LP.

NOTE: Provide a 1/8 in. NPT plugged tapping accessible for test gauge connection immediately upstream of gas connection to the heater.

⚠ CAUTION

When using a stainless steel flexible gas connector, **do not** attach the connector nuts directly to the gas pipe supply. Connector nuts must be installed to an approved adapter.

❹ Attach the flexible connector to the adapter and burner control box inlet. Seal the joints.

NOTE: Excessive torque on the manifold may misalign the orifices. **Always** use two wrenches to tighten mating pipe connections. Final assembly must be tested for gas leaks according to NFPA 54 and all local codes and/or Standards.

⚠ WARNING

Testing for gas leaks with an open flame or other sources of ignition may lead to a fire or explosion and cause serious injury or death. Test in accordance with NFPA or local codes.

Figure 3.19 • Gas Connection (Approved Flexible Gas Connection) • Control Box Side View
NOTE: Do not exceed 14 Inches W.C. to the appliance.

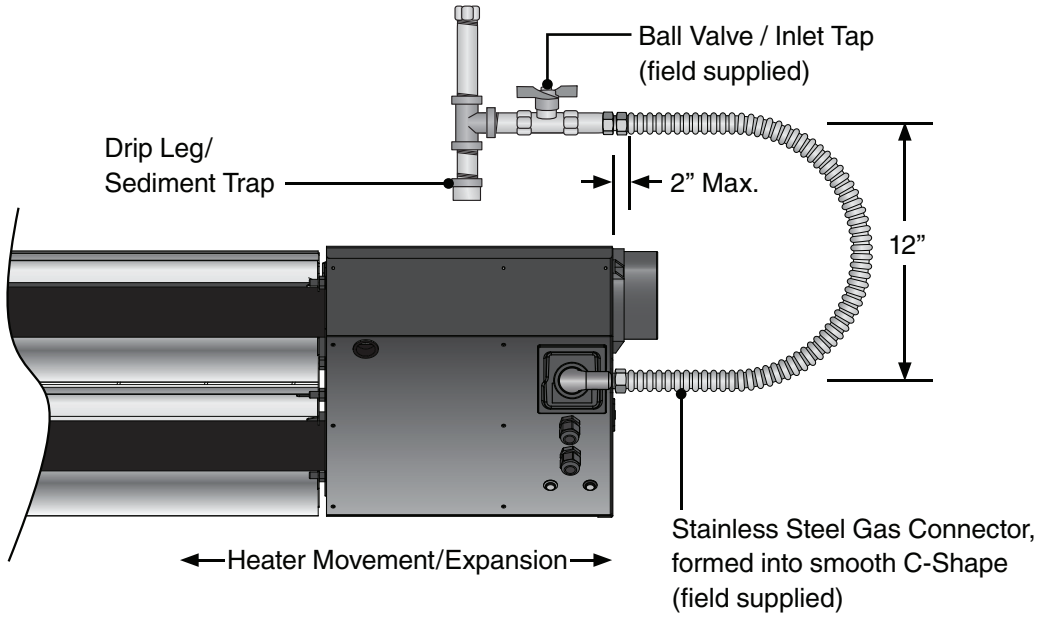

Figure 3.20 • Gas Connection (Approved Flexible Gas Connection) • Control Box Back View

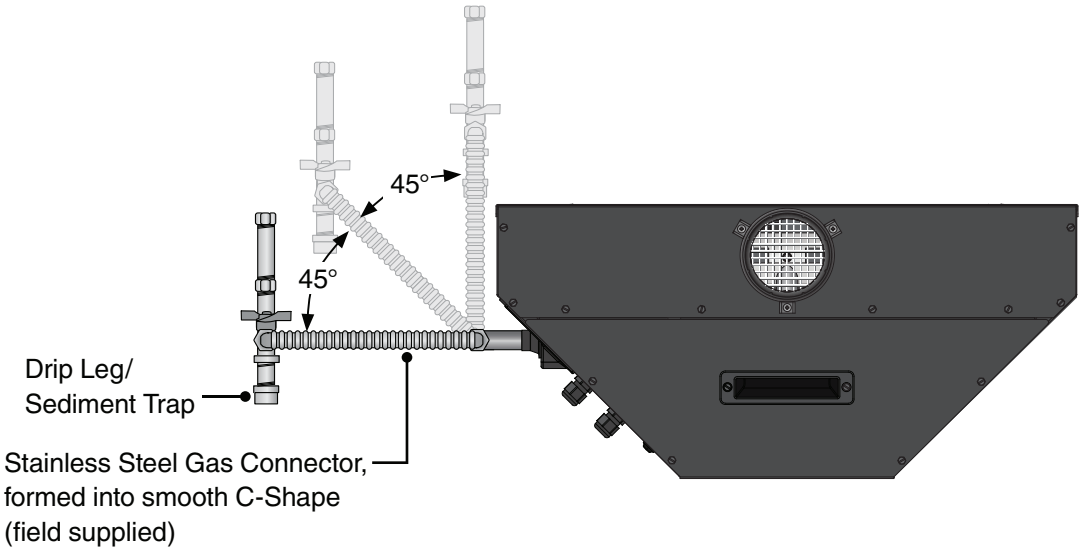

Electrical Requirements

⚠ WARNING

Improper installation, adjustment, alteration, service or maintenance can cause property damage, serious injury or death. Read and understand, the installation, operating and maintenance instructions thoroughly before installing or servicing this equipment. Only trained, qualified gas installation and service personnel may install or service this equipment.

Not for residential use! Do not use this heater in the home, sleeping quarters, attached garages, etc. Installation of a commercial tube heater system in residential indoor spaces may result in property damage, serious injury or death.

The heater must be electrically grounded in accordance with the following codes:

United States: Refer to National Electrical Code®, ANSI/NFPA 70 (latest edition). Wiring must conform to the latest edition of the National Electrical Code®, local ordinances, and any special diagrams furnished.

Canada: Refer to Canadian Electrical Code CSA C22.1 Part 1 (latest edition).

- 120 Volt - 60 Hz GRD, 3-wire.
- 24VAC thermostat connection.
- Starting current 1.5 amps.
- Running current 1.1 amps.

NOTICE

The AVD Series comes standard with internal isolation relays (HLRP). 24 VAC must be supplied to each heater's yellow control cord. The burner control box is equipped with a six (6) foot yellow 24V control wire. Do not supply 120V to the 24V connection.

The 120V supply connection is factory wired with a three-prong pig tail.
Refer to Field Wiring Diagram (see Figure 3.21).

Thermostat

NOTE: Different thermostats operate according to their particular features. Refer to thermostat specifications for details.

AVD Series heaters require a 24V, two-stage thermostat to operate. The burner control box is equipped with a yellow 24V control wire. **Do not** supply 120V to the 24V connection.

Wiring

⚠ WARNING

Electric Shock
Field wiring to the radiant tube heater must be connected and grounded in accordance with national, state, provincial and/or local codes. In the United States refer to the most current revisions to the ANSI/NFPA 70 Standard and in Canada refer to the most current revisions to the CSA C22.1 Part I Standard.

Figure 3.21 • Field Wiring Diagram • Multiple Line Voltage Heater(s), Single 24V Control

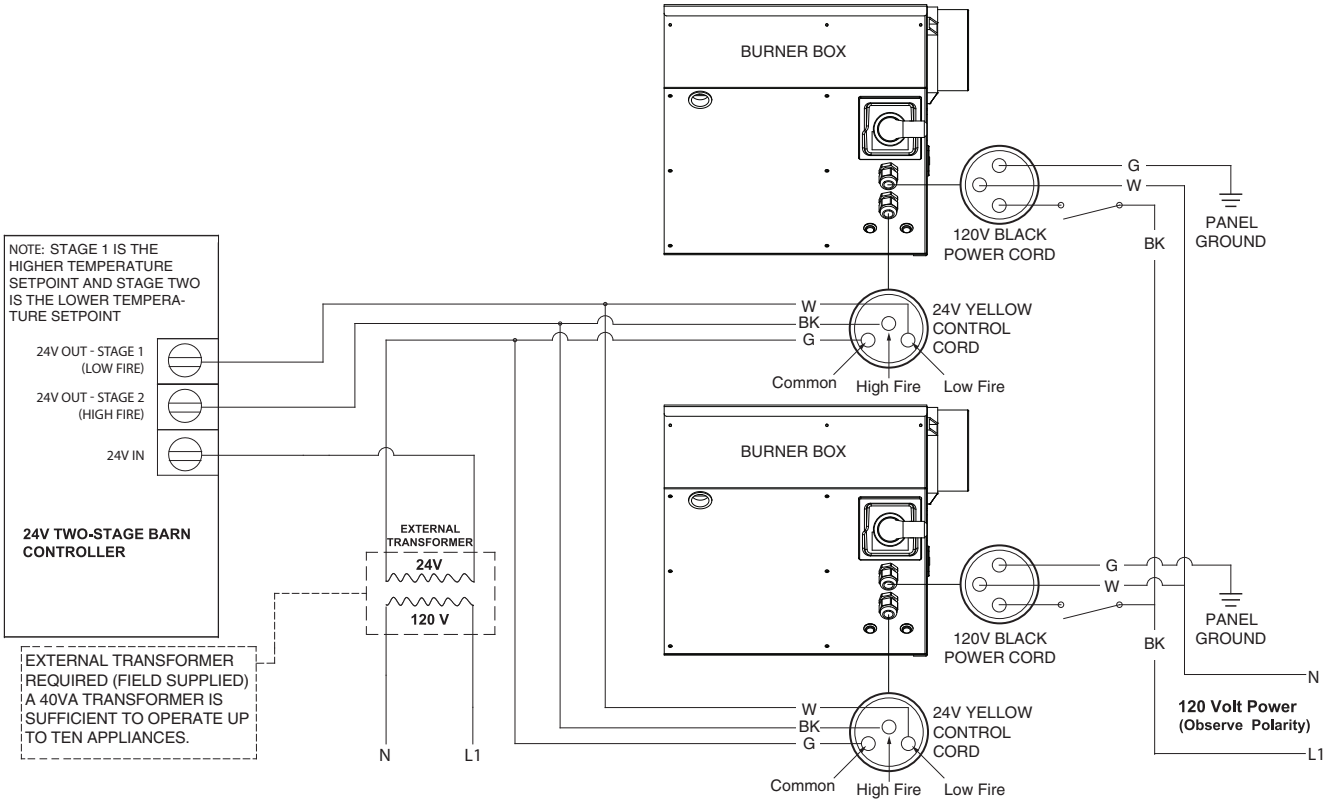

24V Yellow Control Cord
Attach 24V control cord to controller as shown:
Green: Common
White: Low Fire
Black: High Fire

Before field wiring this appliance - Check existing wiring; replace if necessary.

NOTE: If any of the original wire supplied with the appliance must be replaced, it must be replaced with wiring material having a temperature rating of at least 105° C.

Figure 3.22 • Internal Ladder Wiring Diagram

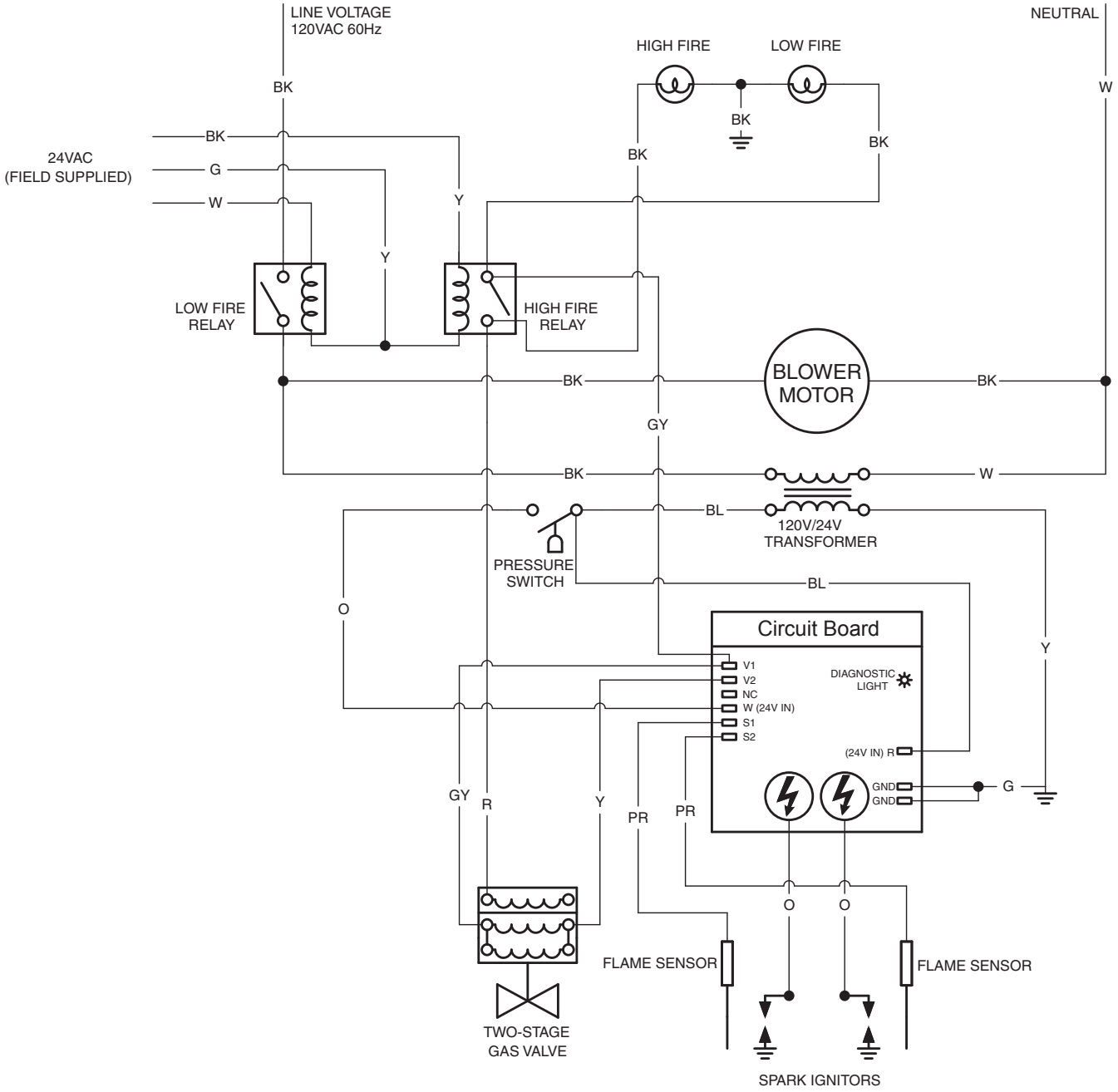

Figure 3.23 • Internal Block Wiring Diagram

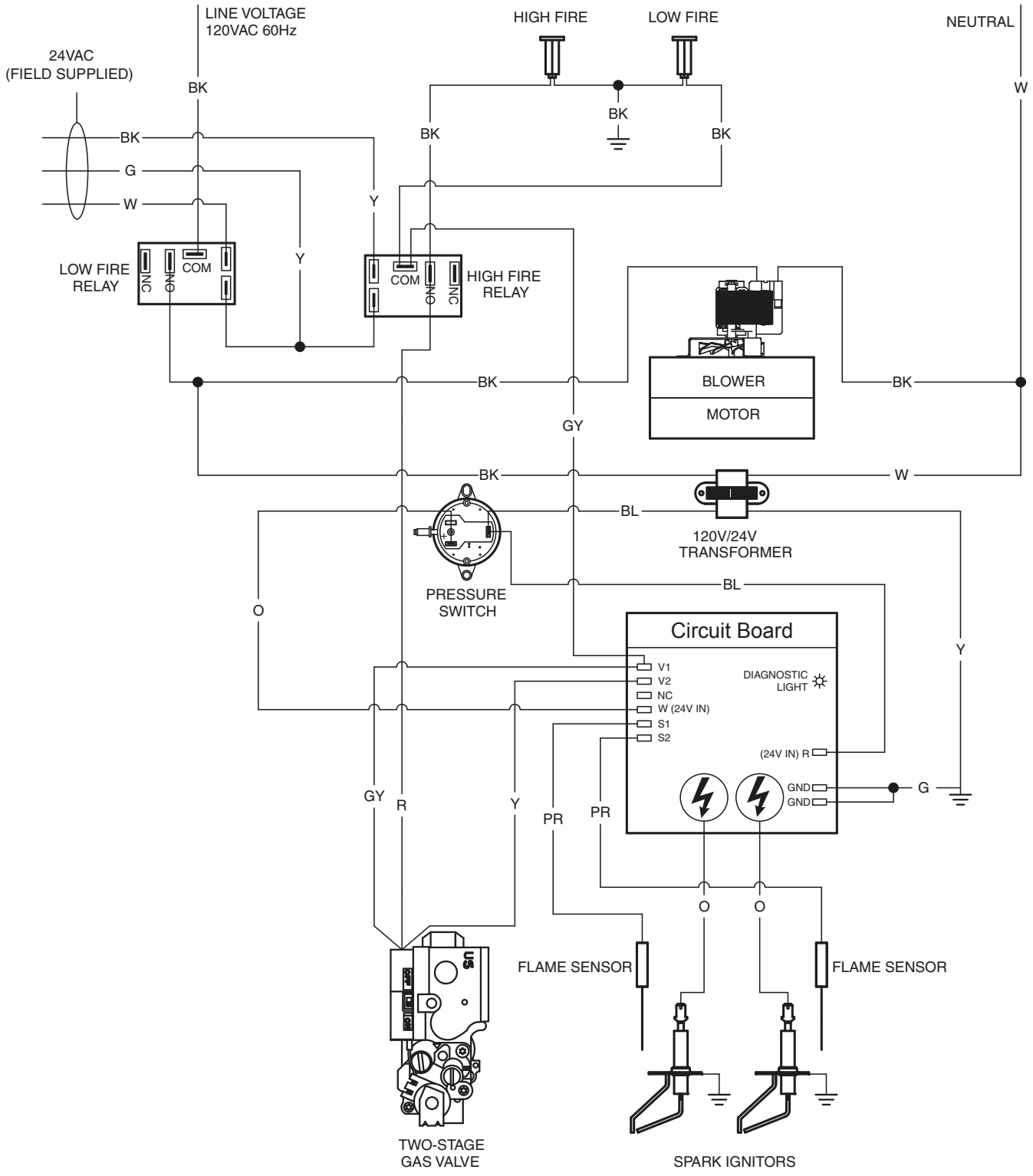

4.0 Operation

⚠ WARNING

This appliance does not have a pilot ignition. It is equipped with an ignition device which automatically lights the burner. **Do not** attempt to light the system by hand.

BEFORE OPERATING, smell all around the appliance area for gas. Be sure to smell next to the floor because some gas is heavier than air and will settle to the floor. Refer to the cover page “If you smell gas” and on the safety label affixed to the heater.

Do not use this appliance if any part has been under water. Immediately contact a qualified service technician to inspect the appliance and to replace any part of the control system and any gas control which has been under water.

Start-up and Shutdown Procedures

⚠ WARNING

Use only your hand to turn the manual shutoff. Never use tools. If the knob will not turn by hand, don’t try to repair it; call a qualified technician. Force or attempted repair may result in a fire or explosion.

Start-up Procedures:

1. **STOP!** Read the safety information above.
2. Set the thermostat to the lowest setting.
3. Turn OFF all electrical power to the appliance.
4. Turn manual shutoff clockwise ↷ to “OFF”.
5. Wait five (5) minutes to clear out any gas. If you smell gas STOP! Follow the safety information found on the cover page under “If you smell gas” and on safety label affixed to the heater. If you do not smell gas, proceed to step 6.
6. Turn manual shutoff knob counterclockwise ↶ to “ON”.
7. Turn ON all electrical power to the appliance.
8. Set thermostat to desired setting.
9. If the appliance will not operate, follow instructions below to turn OFF gas to the appliance and call your service technician or gas supplier.

Shutdown Procedures:

1. Set the thermostat to the lowest setting.
2. Turn OFF all electrical power to the appliance if service is to be performed.
3. Turn manual shutoff knob clockwise ↷ to “OFF”. **Do not** force.

⚠ WARNING

This heater must be installed and serviced by trained gas installation and service personnel only.

Do not bypass any safety features or the heater's built in safety mechanisms will be compromised.

Sequence of Operation

Two voltages (120VAC supply and 24VAC control) must be supplied to the AVD Series unit.

Starting Circuit: Upon a call for heat, the low fire relay is energized by 24VAC from the thermostat/controller. The relay is closed sending 120VAC to the blower and transformer, beginning the sequence of operation. Once operational static pressure is achieved, the differential pressure switch closes, sending power to the ignition module. After a seven-second pre-purge, the spark igniters and the solenoid of the gas valve are simultaneously energized. The trial for ignition is 15 seconds.

First Stage Running Circuit: After ignition, the control monitors burner flame through the flame sensors. If sense of flame is lost, the control immediately sparks (identical to the starting sequence). If flame sense is not established within 15 seconds, the heater will attempt two (2) additional ignition sequences before proceeding to lockout mode. The control can be reset by briefly interrupting the power source.

Second Stage Running Circuit: High fire operation is actuated by the thermostat, switch or controller sending a 24VAC signal to the high fire relay. **NOTE:** Low fire must also be energized to fire the unit in high fire. The energized coil closes a contact sending 24VAC to the high solenoid of the gas valve, increasing the manifold pressure.

5.0 Maintenance

Troubleshooting Guide

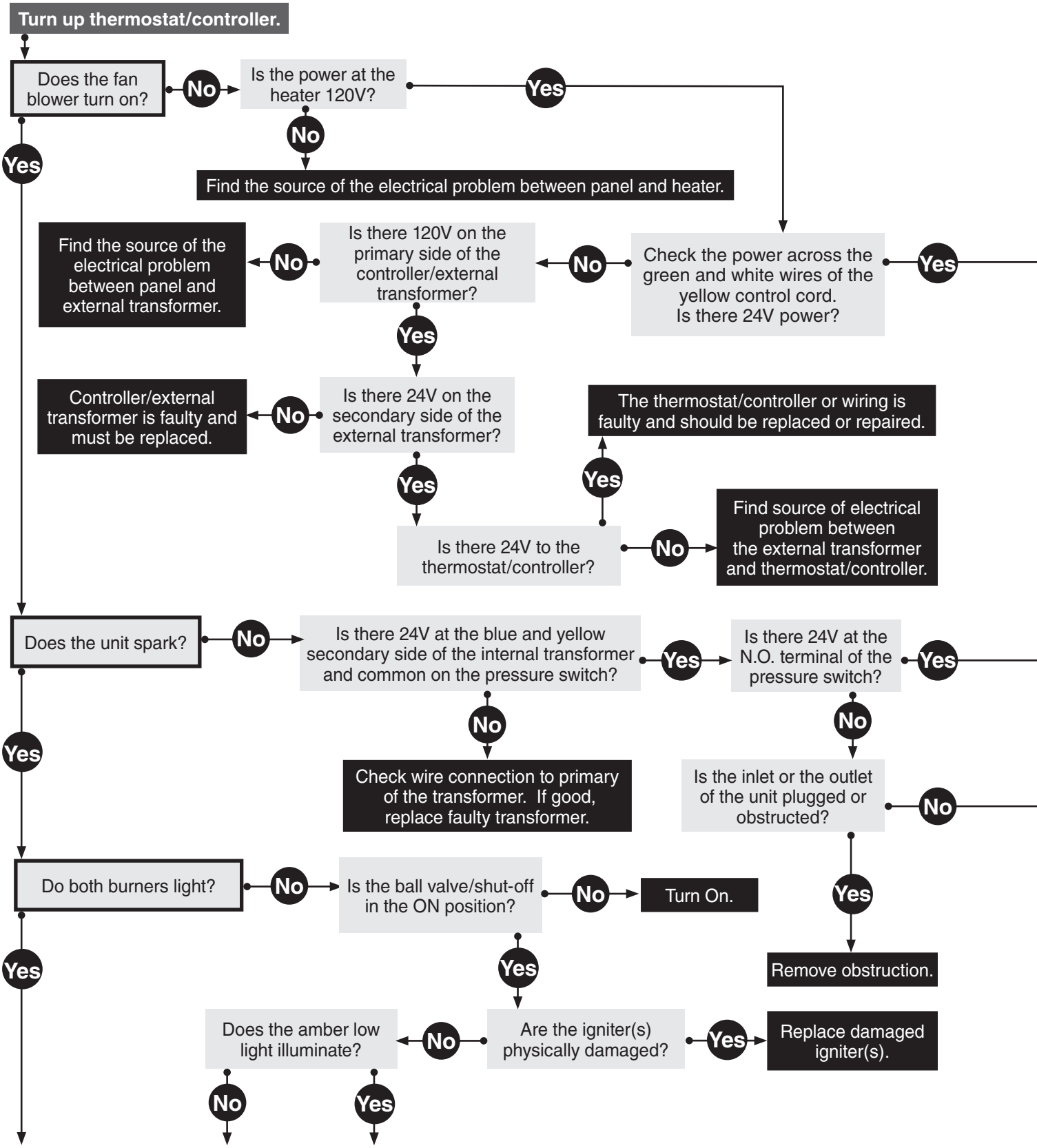

Continued on page 36

NOTICE Bypassing any switch is intended for testing purposes only. Do not leave switch bypassed during normal operation or the heater's built-in safety mechanisms will be compromised.

Key

- Start Question
- Process Question
- Corrective Action

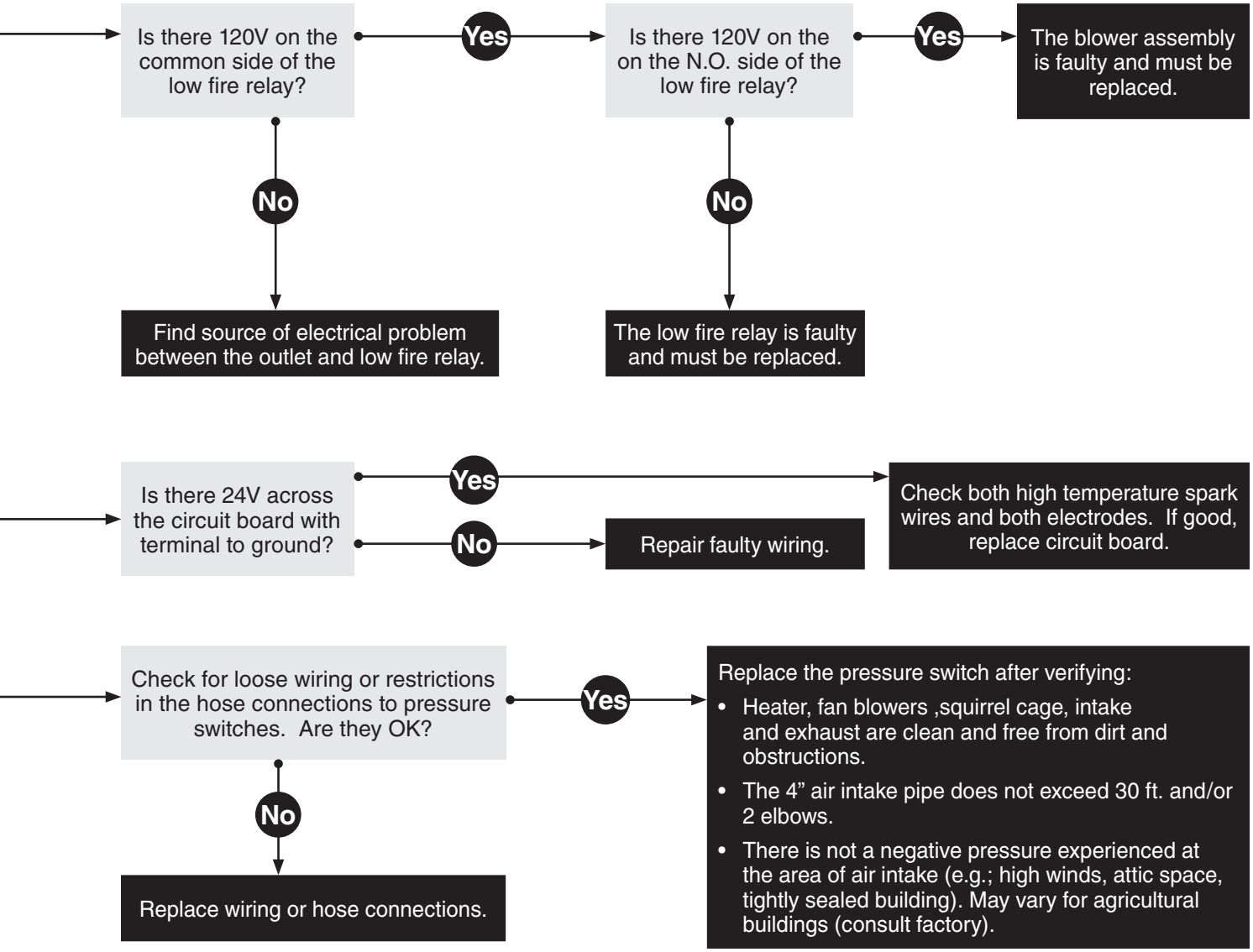

Continued from page 34.

Yes

No

Yes

Test for 24V at valve opening period (usually 7 to 10 seconds after power to heater). Is there 24V to valve for 15 seconds?

Yes

No

Replace circuit board.

Do the burners stay on?

No

Do the burners stay on for approx. 15 seconds and then shut off?

Yes

Yes

No

Does the heater stay on until the call for heat ends?

Do the burners come on and turn off immediately (1 to 2 seconds)?

Yes

Yes

No

No

Contact factory.

The following can cause the heater to shut down:
- Improper grounding.
- High winds.
- Dirty environment.
- Fluctuating gas pressure.

Troubleshooting ends.

Diagnostic Indicator

LED	MODE
1 Flash	Start up.
2 Flashes	Flame. No call for heat.
3 Flashes	Ignition lockout.
4 Flashes	Valve relay lockout.

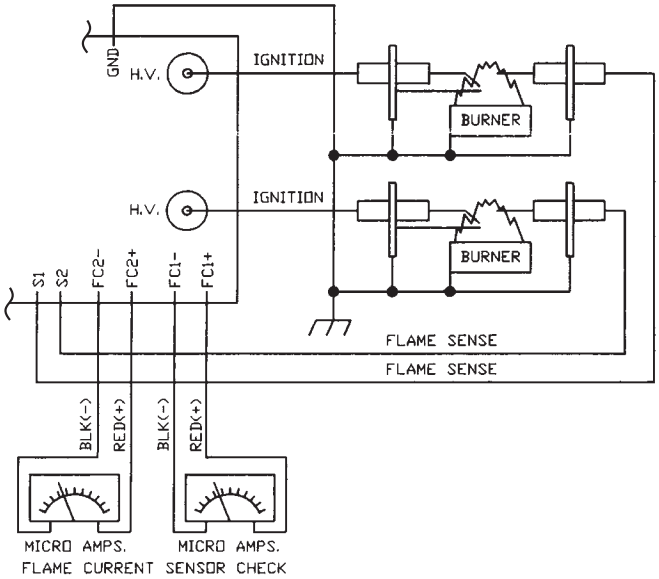

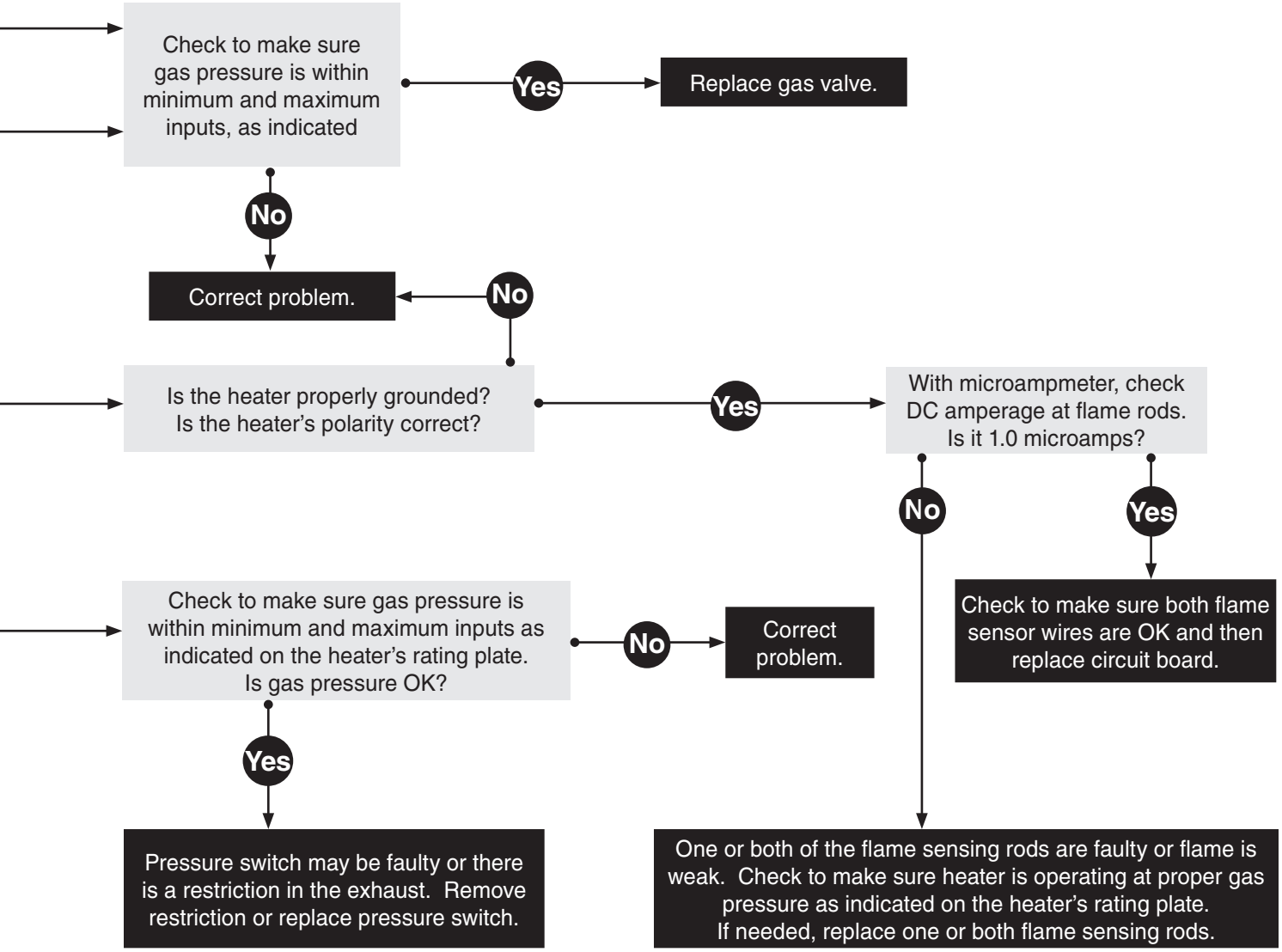

If heater does not enter high fire mode, check the following:

NOTE: To confirm the heater is not in high-fire mode, check the manifold pressure (3.5 inches W.C. natural gas or 10 inches W.C. propane gas). If the indicator light is not illuminated, it is faulty and should be replaced. If the manifold pressure ranges from 2.3 to 2.8 inches W.C. natural gas (model dependent) and 6.0 to 7.5 inches W.C. propane gas (model dependent), the heater is in low fire mode and the troubleshooting steps described below should be followed.

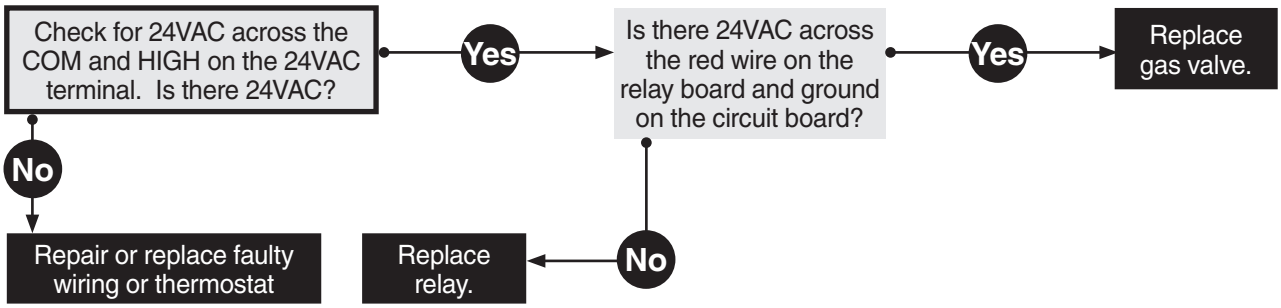

Replacement Parts

Figure 5.1 • Burner Assembly Components

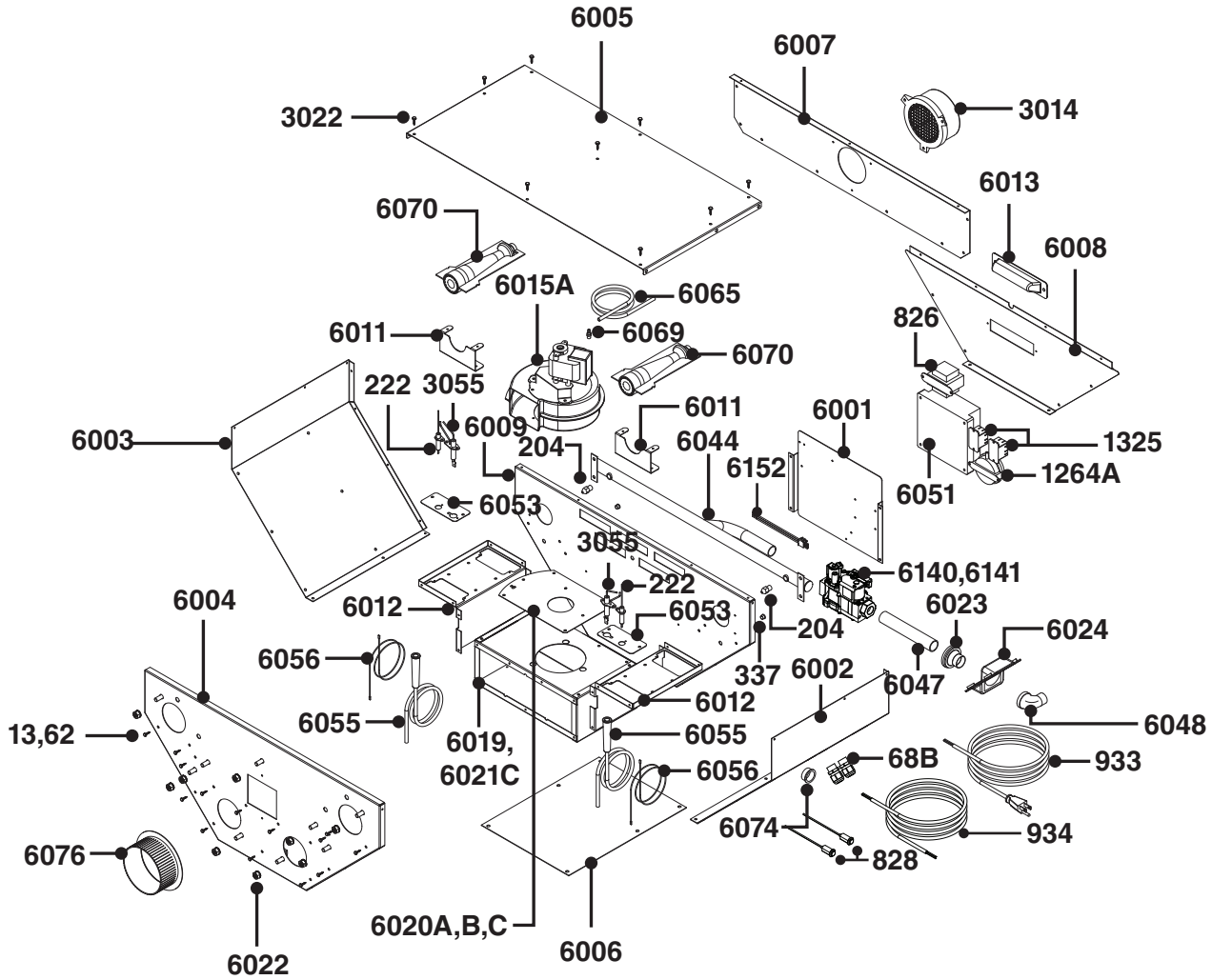

Chart 5.1 • Parts List

Part No.	Description	Part No.	Description
TP-13	#8 x 1/2” Self-Drilling Screw	TP-6003	Burner Box Right Side Panel
TP-62	#8 x 1/2” Aluminized Sheet Metal Screw	TP-6004	Burner Box Front Panel w/9 Weld Studs
TP-68B	Large Strain Relief Bushing	TP-6005	Burner Box Top Cover
TP-204	Gas Orifice - Specify Size	TP-6006	Burner Box Bottom Panel
TP-222	Flame Sensing Rod	TP-6007	Burner Box Rear Panel, Upper
TP-337	Electrical Plastic Bushing	TP-6008A	Burner Box Rear Panel, Lower
TP-826	40VA Transformer - 120V Pri./24V Sec.	TP-6009	Burner Center Panel
TP-828	24VAC Indicator Light	TP-6011	Burner Mounting Holster
TP-933	6’ Black 120VAC Power Cord	TP-6012	Burner and Ignition Supporting Frame
TP-934	6’ Yellow 24VAC Control Cord	TP-6013	Service Access Handle
TP-1264A	Air Proving Switch	TP-6015A	Fan Motor Assembly
TP-1325	24VAC Switching Relay	TP-6019	Exhauster Collector Box
TP-3014	Combustion Air Inlet Collar w/ Screen	TP-6020A	Fan Restrictor Plate - 40
TP-3022	#8 x 1/2” Black Sheet Metal Screw	TP-6020B	Fan Restrictor Plate - 60
TP-3055	2 Prong Ignition Electrode	TP-6020C	Fan Restrictor Plate - 80
TP-6001	Control Mounting Panel	TP-6021B	Tube Flange Gasket
TP-6002A	Burner Box Left Side Panel	TP-6021C	Inducer Box Insulation

Figure 5.2 • Tube & Reflector Components

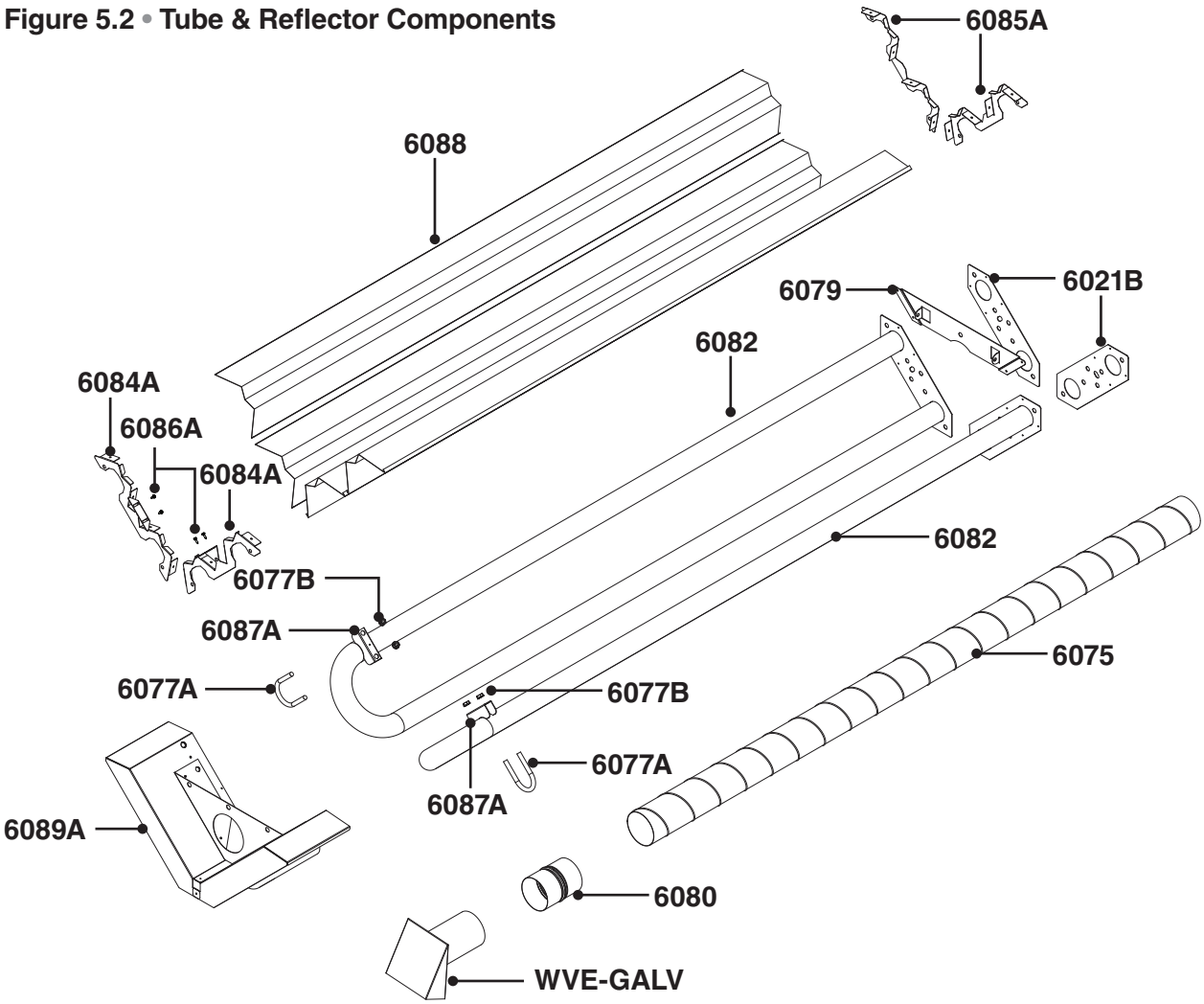

Part No.	Description	Part No.	Description
TP-6022	5/16” - 18 Keps Nut	TP-6077A	U-Bolt Fastener
TP-6023	Rubber Grommet	TP-6077B	3/8” - 16 Keps Nut
TP-6024	Gas Inlet Adapter	TP-6079	Exchanger Connection and Hanging Bracket
TP-6044	Manifold Pipe w/ Foot Mounts	TP-6080	4” Vent Adapter Fitting
TP-6047	5” x 1/2” Gas Inlet Pipe	TP-6082	Radiant U-Tube Assembly w/ Baffle & Plate
TP-6048	1/2” Gas Inlet Street Elbow	TP-6084A	U-End Reflector End Cap
TP-6051	Dual DSI Circuit Board	TP-6085A	Burner Reflector End Cap
TP-6053	Igniter and Sense Mounting Plate	TP-6086A	#8 x 1/2” Red Shoulder Screw
TP-6055	26” High Temp. Spark Wire w/Boot (Orange)	TP-6087A	Tube Saddle Bracket
TP-6056	26” High Temp. Sense Wire (White)	TP-6088	Aluminum Reflector
TP-6065	12” x 5/32” I.D. Silicone Pressure Tubing	TP-6089A	Reflector End Assembly w/Saddle Brackets
TP-6069	Port Barb Fitting	TP-6140	Natural Gas Valve; Two-Stage
TP-6070	Burner	TP-6141	LP Gas Valve; Two-Stage
TP-6074	Sight Glass Plug	TP-6152	Two-Stage Wiring Harness
TP-6075	81” x 4” Vent Pipe	WVE-GALV	4” Galvanized Vent Flapper Cap
TP-6076	4” Vent Collar		

⚠ WARNING

Personal injury or death may result if maintenance is not performed by properly trained gas installer or service personnel. Contact the installing distributor or place of purchase for service. **Do not operate heating system if repairs are necessary**.

Allow heater to cool prior to servicing.

Disconnect power to heater before servicing.

Use protective glasses when maintaining the heater.

Routine Inspection

At least once per year, the heating system should be inspected and serviced by trained gas installation and service personnel only. This inspection should be performed at the beginning of the heating season to insure that all heater components are in proper working order and that the heating system operates at peak performance. Particular attention should be paid to the following items.

- **Blower Motor**: Ensure that the squirrel cage in the blower is kept clean. If dirt becomes a problem, installation of outside air intake ducts for combustion is recommended.

- **Vent pipe system**: Check the outside termination and the connections at the heater. Inspect the vent exhausts for leakage, damage, fatigue, corrosion and obstructions. If dirt becomes a problem, installation of outside air intake ducts for combustion is recommended.

- **Combustion air intake system** (when applicable): Check for blockage and/or leakage. Check the outside termination and the connection at the heater.

- **Heat exchangers**: Check the integrity of the heat exchangers. Replace if there are signs of structural failure. Check for corrosion and/or buildup within the tube exchanger passageways. Check level both ways (side to side; front to back).

- **Burner**: Check for proper ignition, burner flame and flame sense. Flame should extend directly outward from burner without floating or lifting.

- **Wiring:** Check electrical connections for tightness and/or corrosion. Check wires for damage.

- **Gas Connection:** Inspect the integrity of the gas connection to the heater. Check for leaks, damage, fatigue or corrosion. Do not operate if repairs are necessary and turn off gas supply to the heater. Contact service personnel.

- **Reflectors**: Inspect the integrity of the reflectors for damage, separation, missing or misaligned sections and that reflector rotation does not exceed 45° from horizontal. Do not operate if repairs are necessary. Repair or replace as required per the general installation manual.

  To maintain effective infrared heating, always keep both sides of the reflector clean. Dirt and dust can be vacuumed or wiped clean with a soap and water solution. Use metal polish if the reflectors are severely dirty.

Contact service personnel if repairs are necessary. Do not operate unit.

Maintenance Log

Date	Maintenance Performed	Replacement Parts Required

Notes

Limited Warranty Terms and Conditions

One-Year Limited Warranty. Radiant Tube Heaters covered in this manual, are warranted by Detroit Radiant Products Company to the original user against defects in workmanship or materials under normal use for one year after date of purchase. Any part which is determined to be defective in material or workmanship and returned to an authorized service location, as Detroit Radiant Products Company designates, shipping costs prepaid, will be, as the exclusive remedy, repaired or replaced at Detroit Radiant Products Company's option. For limited warranty claim procedures, see PROMPT DISPOSITION below. This limited warranty gives purchasers specific legal rights which vary from jurisdiction to jurisdiction.

Additional Limited Warranty. In addition to the above mentioned one-year warranty, Detroit Radiant Products Company warrants the original purchaser an additional extension on the radiant tubes and combustion burner. This extension excludes electrical/purchased components.

General Conditions. The Company will not be responsible for labor charges for the analysis of a defective condition of the heater or for the installation of replacement parts. The warranties provided herein will not apply if the input of the heater exceeds the rated input at time of manufacturing or if the heater in the judgment of the Company has been subjected to misuse, excessive dust, improper conversion, negligence, accident, corrosive atmospheres, excessive thermal shock, excessive vibration, physical damage to the heater, alterations by unauthorized service personnel, operation contrary to the Company's instructions or if the serial number has been altered, defaced, or removed. The Company shall not be liable for any default or delay in the performance of these warranties caused by contingency beyond its control, including war, government restriction or restraints, strikes, fire, flood, short or reduced supply of raw materials, or parts.

Limitation of Liability. To the extent allowable under applicable law, Detroit Radiant Products Company's liability for consequential and incidental damages is expressly disclaimed. Detroit Radiant Products Company's liability in all events is limited to and shall not exceed the purchase price paid.

Warranty Disclaimer. Detroit Radiant Products Company has made a diligent effort to provide product information and illustrate the products in this literature accurately; however, such information and illustrations are for the sole purpose of identification, and do not express or imply a warranty that the products are merchantable, or fit for a particular purpose, or that the products will necessarily conform to the illustrations or descriptions. Except as provided below, no warranty or affirmation of fact, expressed or implied, other than as stated in the "LIMITED WARRANTY" above is made or authorized by Detroit Radiant Products Company.

Product Suitability. Many jurisdictions have codes and regulations governing sales, construction, installation, and/or use of products for certain purposes, which may vary from those in neighboring areas. While Detroit Radiant Products Company attempts to assure that its products comply with as many codes, it cannot guarantee compliance, and cannot be responsible for how the product is installed or used. Before purchase and use of a product, review the product applications, and all applicable national and local codes and regulations, and be sure that the product, installation, and use will comply with them. Certain aspects of disclaimers are not applicable to consumer products: e.g., (a) some jurisdictions do not allow the exclusion or limitation of incidental or consequential damages, so the above limitation or exclusion may not apply to you: (b) also, some jurisdictions do not allow a limitation on how long an implied warranty lasts, consequently the above limitation may not apply to you: and (c) by law, during the period of this limited warranty, any implied warranties of implied merchantability or fitness for a particular purpose applicable to consumer products purchased by consumers, may not be excluded or otherwise disclaimed.

Prompt Disposition. Detroit Radiant Products Company will make a good faith effort for prompt correction or other adjustment with respect to any product which proves to be defective within limited warranty. For any product believed to be defective within limited warranty, first write or call dealer from whom the product was purchased. Dealer will give additional directions. If unable to resolve satisfactorily, write to Detroit Radiant Products Company at address indicated on page 44, giving dealer's name, address, date and number of dealer's invoice, and describe the nature of the defect. Title and risk of loss pass to buyer on delivery to common carrier. If product was damaged in transit to you, file claim with carrier.

Registration. Register on-line at www.detroitradiant.com/warranty.

Kit Contents Check List

Chart 5.2 • Kit Contents for AVD Series

AVD Series Kit Contents

Packed with Emitter Assembly and Reflectors

AK-IP: 29” x 4” PVC Pipe with Attached Metal Intake Cap

WVE-GALV: 4” Galvanized Vent Flapper Cap

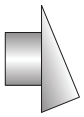

TP-6084A: U-End Reflector End Cap

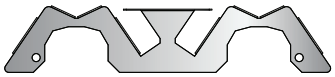

AIRH: 18” x 4” Inlet Hose w/ PVC Fitting & Worm Clamp

AV-CS: Chain Set w/ S-Hooks

TP-6085A: Burner Reflector End Cap

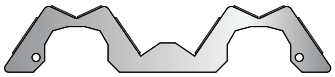

TP-6080: 4” Vent Adapter Fitting

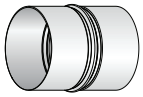

TP-13: Self-Drilling Screw

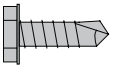

AK-WS: 2” Wood Screw

TP-62: #8 x 1/2” Screw for Reflectors

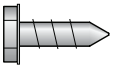

TP-6086A: #8 x 1/2” Red Shoulder Screw

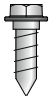

Packed with Burner Control Box

TP-6021B: Tube Flange Gasket

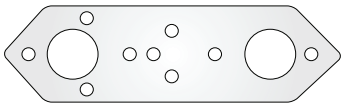

TP-6022: 5/16”-18 Keps Nut

LIOAVD: AVD Series Installation, Operation and Parts Manual

Box	Part No.	Description	Quantity
T	AIRH	18” x 4” Clear Inlet Hose with PVC Fitting & Worm Clamp	1
T	AV-CS	Bulldog #1 12-Ga. 12” Chains with S-Hooks	3
T	AK-IP	29” x 4” PVC Pipe with Attached Metal Intake Cap	1
T	AK-WS	2” Wood Screw	2
B	LIOAVD	AVD Series Installation, Operation, Parts Manual	1
T	TP-13	Self Drilling Screws for Vent Pipe	9
T	TP-62	#8 x 1/2” Screw for Reflectors	16
B	TP-6021B	Tube Flange Gasket	2
B, T	TP-6022	5/16” - 18 Keps Nut	9, 4
T	TP-6075	81” x 4” Spiral Vent Pipe	1
T	TP-6080	4” Vent Adapter Fitting	1
T	TP-6084A	U-End Reflector End Cap	2
T	TP-6085A	Burner Reflector End Cap	2
T	TP-6086A	#8 x 1/2” Red Shoulder Screw	4
T	WVE-GALV	4” Galvanized Vent Flapper Cap	1
Filled By:			

B = Packed with Burner Control Box **T** = Packed with Emitter Assembly and Reflectors

Approvals

- CSA.
- Indoor approval.
- Brooder approval.

Limited Warranty

- 1 year - Burner box components.
- 3 years - Radiant tubes.
- 5 years - Combustion burner.
- See page 43 for terms and conditions.

© 2012 Detroit Radiant Products Co.
21400 Hoover Road • Warren, MI 48089
Phone: (586) 756-0950
Fax: (586) 756-2626
www.detroitradiant.com
sales@drp-co.com