RV Series
Installation Manual

CE 0063

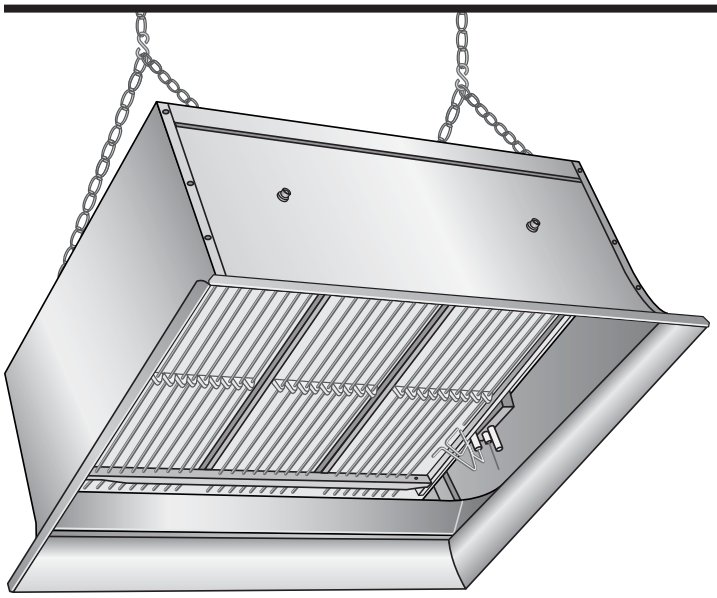

Gas Fired Radiant Plaque Heater Installation, Operation, Maintenance, and Parts

This appliance is pre-set for use in the country whose code appears on the appliance's rating label only. If the code on the appliance does not match your application, refer to the technical instructions for adapting the appliance to the conditions for use in that country.

⚠ WARNING

Read these instructions carefully before attempting to install, operate, or service the heater.

This heater ***must*** be installed and serviced by a Gas Safe Gas Engineer only! Conversion of the heater for use with other gases must be carried out by a Gas Safe Gas Engineer.

All persons involved with the installation, operation, and maintenance of the heater system must read and understand the information in this manual. Failure to comply with these warnings and instructions, or those on the heater, could result in personal injury, death, fire, asphyxiation, and/or property damage.

Not for domestic use!
This unflued, gas fired, overhead radiant heater is designed for use in industrial and commercial building such as warehouses, manufacturing plants, aircraft hangars, service garages, etc. This heater is **not** approved in any domestic application. This includes (but is not limited to) the home, living quarters, attached garages, etc. Installation in domestic indoor spaces may result in property damage, asphyxiation, serious injury, or death.

The manufacturer cannot anticipate every use that may be made with their heaters. Check with your local fire safety authority if you have questions about local regulations.

INSTALLER: Present this manual to the end user.
Keep these instructions in a clean and dry place for future reference.

Model#: _____ **Serial #:** _____
(located on rating label)

21400 Hoover Road
Warren, MI 48089 U.S.A.
Voice: (586) 756-0950
Fax: (586) 756-2626
www.detroitradiant.com

© 2022 Detroit Radiant Products Company

LIOGRV-Rev. 03312
Print: 1M-04/22(CDS)
Replaces: LIOGRV-2M-10/19(CDS)

Contents

1.0 Safety **2**
Codes and Regulations 2
General Specifications 3
Safety 4
Clearances to Combustibles 6

2.0 Installation **8**
Design 8
Heater Mounting 9
Ventilation 12
Gas Supply 13
Electrical 14

3.0 Operation **16**
Pre-Commissioning 17
Commissioning 17

4.0 Maintenance **18**
Troubleshooting 18
Replacement Procedures 19
Converting Gas Type 21

5.0 Parts **24**
Heater Components Parts List 24

Codes and Regulations

Before installation, check that the local distribution nature of gas and pressure, and adjustment of the appliance are compatible. Not withstanding their limited scope, this appliance should be installed in accordance with relevant provisions of the following regulations:

UNITED KINGDOM:

Gas safety (Installation and Use) Regulations 1984 and BS 6896:2011. Due account should be taken of any obligations arising from the Health and Safety at Work etc. Act 1974, the current Building Regulations, the current I.E.E. Regulations and other relevant codes of practice.

IRELAND:

I.S. 3212:1987, ICP 4, I.S. 327. Due account should be taken of any obligations arising from the current Building Regulations, the current I.E.E. Regulations and other relevant codes of practice.

1.0 Safety

General Specifications

Table 1.1 • RV Series General Specifications

Model No.	Nominal Heat Input (H_S)	Gas Consumption	Burner Qty.	Injector Size	Burner Pessure	Gas Connection	Appliance Type	Electrical Supply	Electrical Protection	Height (mm)	Width (mm)	Depth (mm)	Weight (kg)
CATEGORY I_{2H}													
RV 30	8,8 kW	0,84 m³/h	1	#43	15,0 mbar	Rp 1/2 (DN15) ISO 7-1	A1	230V 50Hz 30W	IP-20	575	314	289	8,2
RV 50	14,6 kW	1,39 m³/h	2	#44							479		12,2
RV 60	17,6 kW	1,68 m³/h	2	#43							479		12,2
RV 80	23,5 kW	2,24 m³/h	3	#44							645		16,3
RV 90	26,4 kW	2,51 m³/h	3	#43							645		16,3
RV 100	29,3 kW	2,79 m³/h	3	#42							645		16,3
RV 120	35,2 kW	3,35 m³/h	4	#43							810		20,4
RV 130	38,1 kW	3,63 m³/h	4	#42							810		20,4
RV 150	44,0 kW	4,19 m³/h	5	#42							975		24,5
RV 160	46,9 kW	4,47 m³/h	5	#42							975		24,5
CATEGORY I_{2L}													
RV 30	8,8 kW	0,98 m³/h	1	#40	15,0 mbar	Rp 1/2 (DN15) ISO 7-1	A1	230V 50Hz 30W	IP-20	575	314	289	8,2
RV 50	14,6 kW	1,62 m³/h	2	#42							479		12,2
RV 60	17,6 kW	1,95 m³/h	2	#40							479		12,2
RV 80	23,5 kW	2,60 m³/h	3	#42							645		16,3
RV 90	26,4 kW	2,93 m³/h	3	#40							645		16,3
RV 100	29,3 kW	3,25 m³/h	3	#38							645		16,3
RV 120	35,2 kW	3,90 m³/h	4	#40							810		20,4
RV 130	38,1 kW	4,22 m³/h	4	#38							810		20,4
RV 150	44,0 kW	4,88 m³/h	5	#38							975		24,5
RV 160	46,9 kW	5,20 m³/h	5	#38							975		24,5
CATEGORY I_{3P}													
RV 30	8,8 kW	0,33 m³/h	1	#52	25,0 mbar	Rp 1/2 (DN15) ISO 7-1	A1	230V 50Hz 30W	IP-20	575	314	289	8,2
RV 50	14,6 kW	0,55 m³/h	2	#53							479		12,2
RV 60	17,6 kW	0,66 m³/h	2	#52							479		12,2
RV 80	23,5 kW	0,88 m³/h	3	#53							645		16,3
RV 90	26,4 kW	0,99 m³/h	3	#52							645		16,3
RV 100	29,3 kW	1,10 m³/h	3	#52							645		16,3
RV 120	35,2 kW	1,32 m³/h	4	#52							810		20,4
RV 130	38,1 kW	1,43 m³/h	4	#52							810		20,4
RV 150	44,0 kW	1,66 m³/h	5	#52							975		24,5
RV 160	46,9 kW	1,77 m³/h	5	#52							975		24,5

⚠ WARNING

Improper installation, adjustment, alteration, service, or maintenance can cause property damage, serious injury, or death. Read and understand the installation, operating, and maintenance instructions thoroughly before installing or servicing this equipment. Only trained, qualified gas installation and service personnel may install or service this equipment.

Safety Symbols

Safety is the most important consideration during installation, operation, and maintenance of the infrared heater. You will see the following symbols and signal words when there is a hazard related to safety or property damage.

⚠ WARNING — **Warning** indicates a potentially hazardous situation which, if not avoided, could result in death or injury.

⚠ CAUTION — **Caution** indicates a potentially hazardous situation which, if not avoided, could result in minor or moderate injury.

NOTICE — **Notice** indicates a potentially hazardous situation which, if not avoided, could result in property damage.

Applications

This is not an explosion proof heater. Consult your local fire service, insurance carrier, and other authorities for approval of the proposed installation.

Commercial / Industrial

Infrared heaters are designed and certified for use in industrial and commercial buildings such as warehouses, manufacturing plants, aircraft hangars, and vehicle maintenance shops. For maximum safety, the building must be evaluated for potential hazards before installing the heater system. A critical safety factor to consider before installation is the clearances to combustibles.

Residential

This heater is **NOT** approved for use in any domestic application. This includes, but is not limited to, attached garages, living quarters, solariums, etc. Consult the local fire service and/or insurance provider if unsure of your application.

⚠ WARNING

Not For Residential Use.
Installation of an infrared heater system in residential indoor spaces, RV's, mobile homes, etc. may result in property damage, asphyxiation, fire, serious injury, or death.

Safety Labels

Safety warning labels must be maintained on the infrared heater. Illustrations of the safety labels and their locations are pictured below.

Figure 1.1 • Safety Label Locations

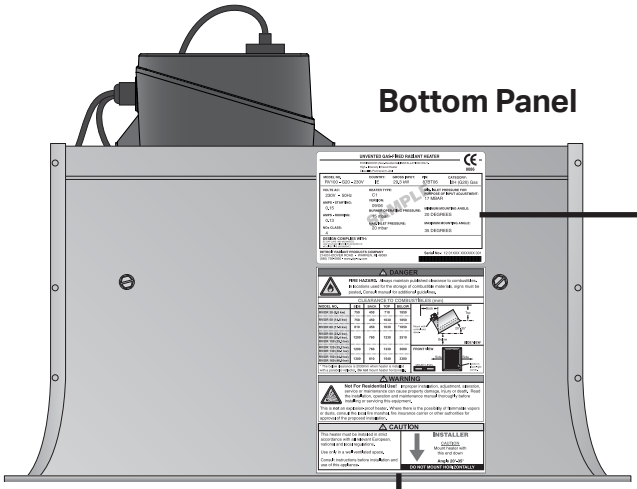

UNVENTED GAS-FIRED RADIANT HEATER

FOR INDOOR (Non-Residential) INSTALLATION ONLY.
High - Intensity Infrared Heater
Class IIIA Permanent Label

0086

MODEL NO.	COUNTRY:	GROSS INPUT:	PIN:	CATEGORY:
RV100 - G20 - 230V	IE	29.3 kW	87BT06	I2H (G20) Gas

VOLTS AC: 230V - 50Hz
AMPS - STARTING: 0.15
AMPS - RUNNING: 0.13
NOx CLASS: 4
HEATER TYPE: C1
VERSION: 09/06
BURNER OPERATING PRESSURE: 15 mbar
MAX. INLET PRESSURE: 20 mbar
MIN. INLET PRESSURE FOR PURPOSE OF INPUT ADJUSTMENT: 17 MBAR
MINIMUM MOUNTING ANGLE: 20 DEGREES
MAXIMUM MOUNTING ANGLE: 35 DEGREES

SAMPLE

DESIGN COMPLIES WITH:
EC GAP JUNE 1990 (90/396/EEC)
LOW VOLTAGE DIRECTIVE (92/42/EEC) E
MC DIRECTIVE (89/338/EMC)

This appliance must be installed in accordance with the rules in force. It shall be used in a space ventilated in accordance with the requirements of EN 13410. Consult the instructions before installation and use of this appliance.

DETROIT RADIANT PRODUCTS COMPANY
21400 HOOVER ROAD - WARREN, MI 48089
(586) 756-0950 - www.drp-co.com

Serial No.: 12 01XXX XXXXXX 001

Heater Data Badge

⚠ DANGER

FIRE HAZARD. Always maintain published clearance to combustibles. In locations used for the storage of combustible materials, signs must be posted. Consult manual for additional guidelines.

CLEARANCE TO COMBUSTIBLES (mm)

MODEL NO.	SIDE	BACK	TOP	BELOW
RV/DR 30 (8.8 kw)	750	450	710	1850
RV/DR 50 (14.6 kw)	750	450	1030	1850
RV/DR 60 (17.6 kw)	810	450	1030	*1850
RV/DR 80 (23.5 kw), RV/DR 90 (26.4 kw), RV/DR 100 (29.3 kw)	1200	760	1230	2510
RV/DR 120 (35.2 kw), RV/DR 130 (38.1 kw)	1200	760	1330	3080
RV/DR 150 (44.0 kw), RV/DR 160 (46.9 kw)	1300	810	1540	3380

* The below clearance is 2030mm when heater is installed with a parabolic reflector. **Do not** mount heater horizontally.

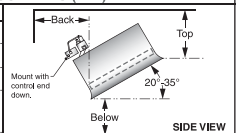

⚠ WARNING

Not For Residential Use! Improper installation, adjustment, alteration, service or maintenance can cause property damage, injury or death. Read the installation, operation and maintenance manual thoroughly before installing or servicing this equipment.

This is **not** an explosion-proof heater. Where there is the possibility of flammable vapors or dusts, consult the local fire marshal, fire insurance carrier or other authorities for approval of the proposed installation.

⚠ CAUTION

This heater must be installed in strict accordance with all relevant European, national and local regulations.

Use only in a well ventilated space.

Consult instructions before installation and use of this appliance.

INSTALLER

CAUTION
Mount heater with this end down

Angle 20°-35°

DO NOT MOUNT HORIZONTALLY

F/N: LLDCL003
Clearances to Combustibles Label

Clearances to Combustibles

⚠ WARNING

Placement of explosive objects, flammable objects, liquids, and vapors close to the heater may result in explosion, fire, property damage, serious injury, or death. DO NOT STORE OR USE PETROL OR OTHER INFLAMMABLE VAPORS AND LIQUIDS IN THE VICINITY OF THIS OR ANY OTHER APPLIANCES.

Failure to comply with the published clearances to combustibles could result in personal injury, death, and/or property damage.

⚠ CAUTION

Signs shall be posted specifying the maximum permissible stacking height in order to maintain clearances to combustibles.

A critical safety factor to consider before installation is the clearances to combustibles. **Clearance to combustibles** is defined as *the minimum distance that must exist between the infrared surface, or reflector, and the combustible item*. Considerations must also be made for moving objects around the infrared heater.

IMPORTANT: Fire sprinkler heads must be located at an appropriate distance from the heater. This distance may exceed the published clearances to combustibles. Certain applications will require the use of high temperature sprinkler heads or relocation of the heaters.

Potentially flammable substances, such as propylene glycol or other antifreeze solution, are not to be used in conjunction with this heater without careful consideration for and avoidance of all potential hazards.

When installing the infrared heater system, the minimum clearances to combustibles must be maintained. These distances are shown in Table 1.2 and on the heater. If you are unsure of the potential hazards, consult your local inspector, fire insurance carrier, or other qualified authorities on the installation of gas fired infrared heaters for approval of the proposed installation.

Table 1.2 • Clearances to Combustibles in Centimeters (see Figure 1.2)

Model No.	Sides	Back	Top	Below/Front
RV 30	75	45	71	185
RV 50	75	45	103	185
RV 60	81	45	103	185*
RV 80	120	76	123	251
RV 90	120	76	123	251
RV 100	120	76	123	251
RV 120	120	76	133	308
RV 130	120	76	133	308
RV 150	130	81	154	338
RV 160	130	81	154	338

* This clearance is 203 cm when the heater is fitted with a parabolic reflector.

NOTE: If the heater is mounted beneath a non-combustible surface, a 61 cm minimum top clearance must be maintained from the top of the heater to prevent overheating the controls.

In locations used for the storage of combustible materials, signs must be posted to specify the maximum permissible stacking height to maintain the required clearances from the heater to the combustibles. Signs must either be posted adjacent to the heater thermostats or, in the absence of such thermostats, in a conspicuous location.

Figure 1.2 • Clearances to Combustibles

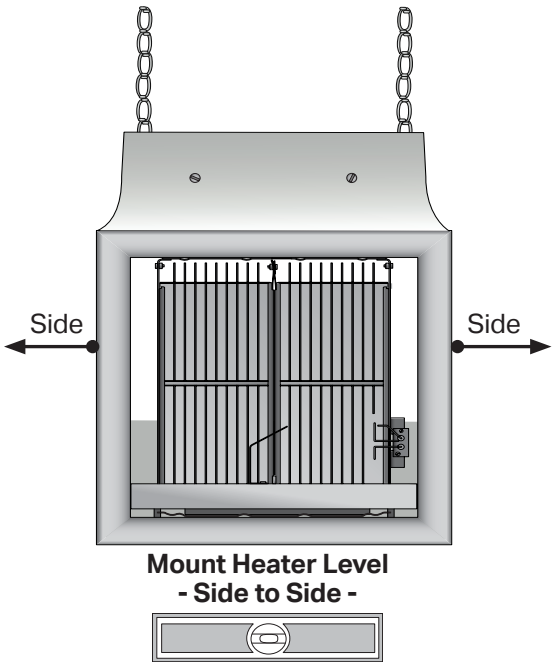

FRONT VIEW

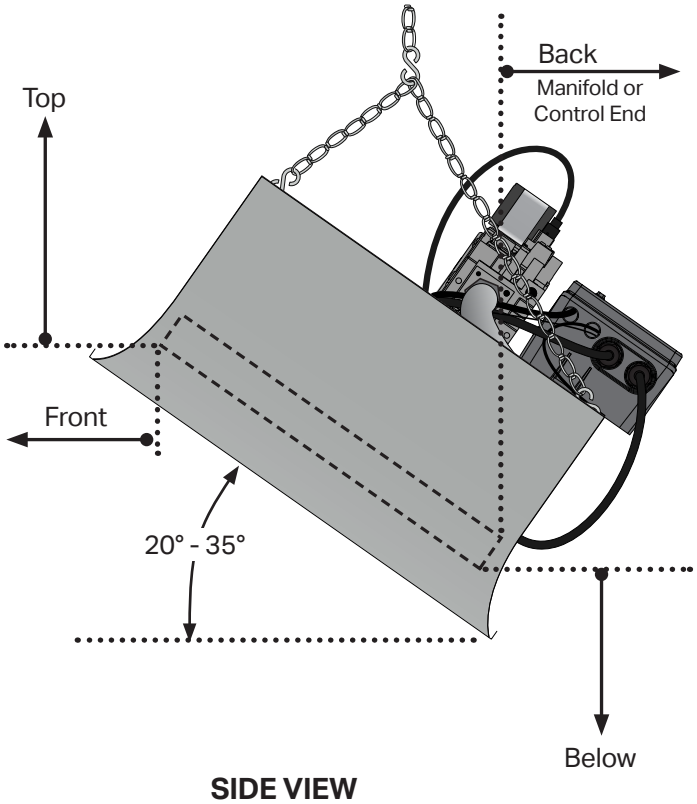

SIDE VIEW

2.0 Installation

⚠ WARNING

Read and understand the installation, operating, and maintenance instructions thoroughly before installing or servicing this equipment.

Only trained, qualified gas installation and service personnel may install or service this equipment.

⚠ CAUTION

Before installation, check that the local distribution condition, the nature of gas and pressure, and adjustment of the appliance are compatible.

⚠ WARNING

Improper suspension of the infrared heater may result in collapse and being crushed. Always suspend from a permanent part of the building structure that can support the total force and weight of the heater.

Failure to maintain minimum clearances to combustibles may result in fire and/or explosion, property damage, serious injury, or death. Always maintain minimum clearances and post signs or provided tags where needed. Signs should state the hazards for the particular application and be legible to the building occupants. Consult the factory or a factory representative for additional information on signage compliance.

Design

To ensure a safe, properly designed heating system, a layout should be developed for the correct placement of the infrared heater(s). Aside from safety factors such as clearances to combustibles (see Table 1.2 on page 7), you should take into consideration the environment (e.g., cold/drafty, average, protected), heat coverage (m^3) needed, heater centers, the distance behind a person or work station(s), and exhaust path. Also, the effective infrared surface temperature of a person or object may be diminished with winds above 8 km/h. Wind barrier(s) may be required. Most importantly, clearances to combustibles **must** always be maintained!

This installation manual and applicable relevant codes address these issues. It is critical that you read, understand, and follow all guidelines and instructions. Always inspect and evaluate the mounting conditions, space for exhaust, gas supply, and wiring.

Heater Mounting

Whenever possible, fit the heater at the recommended mounting height above floor level (see Table 2.1 below). When considering heater position, ensure that the required minimum clearances between the various heater surfaces and combustible materials are preserved (refer to Table 1.2 on page 7).

Extended parabolic reflectors are available for all heater models. When these are fitted, the higher mounting heights given in Table 2.1 should be maintained.

Table 2.1 • Recommended Mounting Heights and Distances

Model No.	30° Angle Standard Reflector (meters)	30° Angle Parabolic Reflector (meters)
RV 30	3,8	4,3
RV 50	4,2	5,5
RV 60	4,5	6,1*
RV 80	5,0	6,4
RV 90	5,5	7,0
RV 100	6,0	7,6
RV 120	7,0	8,2
RV 130	7,5	8,5
RV 150	8,0	9,2
RV 160	8,5	10,0

***** Clearance to combustibles is increased when using this accessory on this model (see Table 1.2 on page 7).
NOTE: Fixing heights are measured from the centre of the heater face.

Factory recommended mounting heights are listed as a guideline. If infrared heaters are mounted too low or too high, they may result in discomfort or lack of heat. It is recommended that mounting heights are observed in order to optimize comfort conditions. However, certain applications such as spot heating, freeze protection, or very high ceilings may result in the heaters being mounted outside of the recommended mounting heights.

Figure 2.1 • Heater Orientation

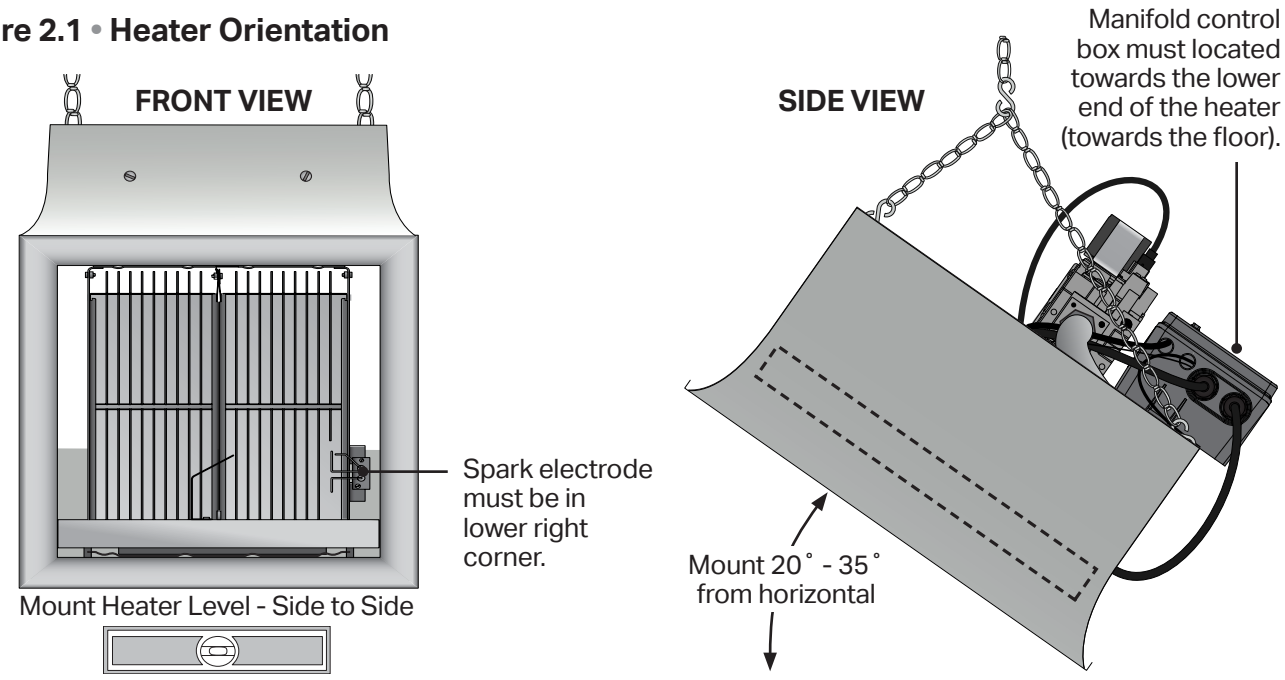

Preferred Mounting Methods

Heaters may be suspended from roof structures by various methods. Figure 2.2 below shows common methods to mount the heater. Some local regulations or application conditions, such as draughts that could cause the unit to swing, stipulate that if flexible gas connectors are used then the heater must be rigidly mounted.

The heater must be level from side to side and between 20° and 35° from horizontal. The igniter, manifold, and controls must be located on the lower end.
THE HEATER FACE MUST NOT MAKE AN ANGLE OF LESS THAN 20° WITH HORIZONTAL.

The flue outlet area of the heater must remain free of obstructions at all times. Gas pipework or electrical cables must never be used to lend mechanical support to the heater.

Figure 2.2 • Common Mounting Methods

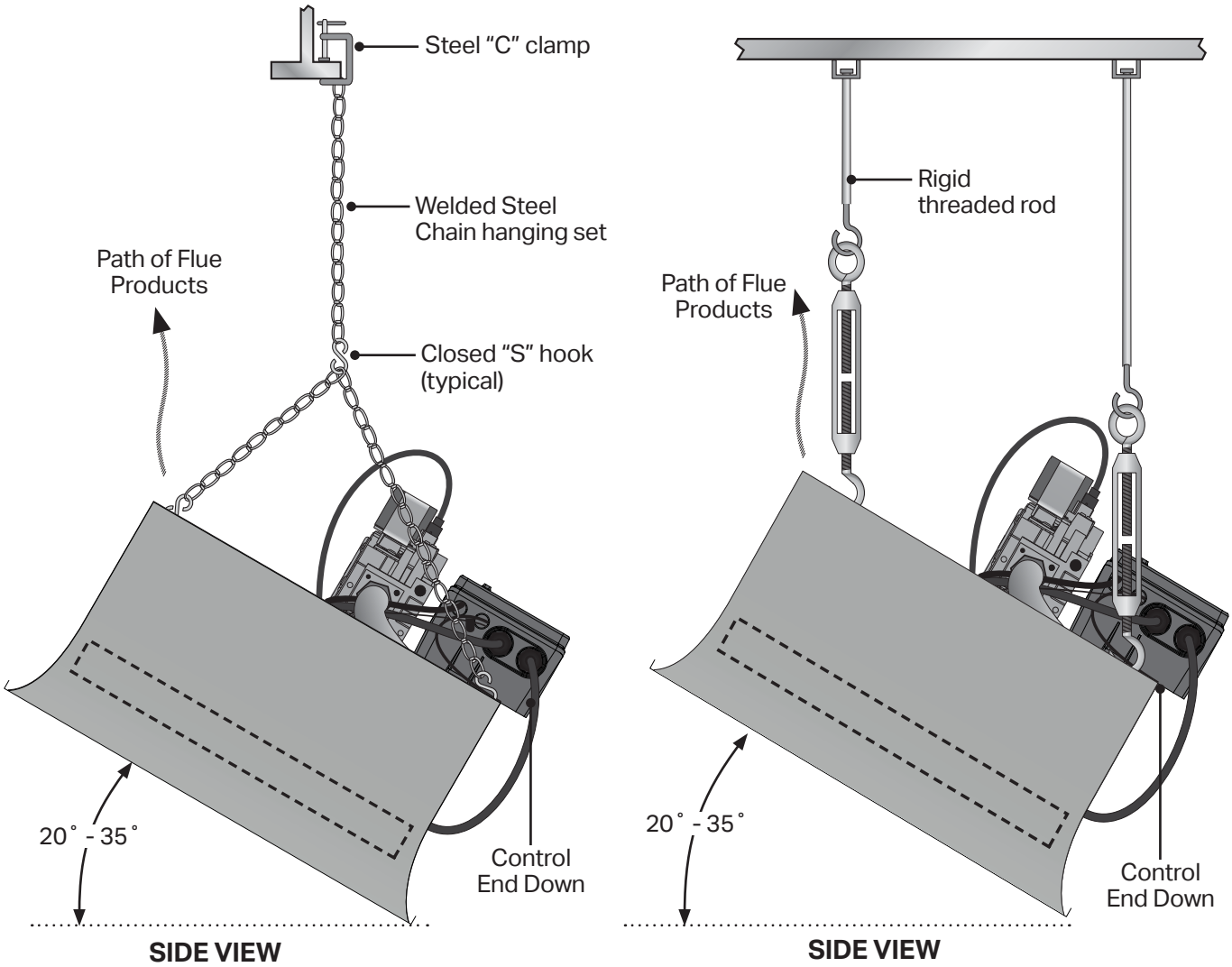

Mounting the Heater Using Optional Wall Bracket Set

Wall brackets allow mounting angles between 20° and 35° to the horizontal, and heaters must not be installed on walls or at angles outside of this range.

❶ Place brackets in proposed heater position on the wall. Check that they are properly aligned and mark in hole positions for fixing screws (see Table 2.2 below). Drill holes, fit plugs, and use screws to fix brackets in position.

❷ Fix each bottom side of the heater to the bottom side of its respective wall bracket using the nuts and bolts provided. Connect top sides of the heater to bracket using S-hooks and chain.

Table 2.2 • Wall Bracket Mounting Dimensions (not included with heater)

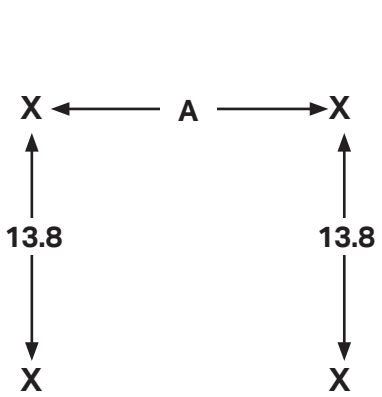

Model No.	Dim. A (cm)	Dim. B (cm)
RV 30	12,5	20,0
RV 50	28,7	20,0
RV 60	28,7	20,0
RV 80	45,3	20,0
RV 90	45,3	20,0
RV 100	45,3	40,0
RV 120	61,5	40,0
RV 130	61,5	40,0
RV 150	69,5	40,0
RV 160	69,5	40,0

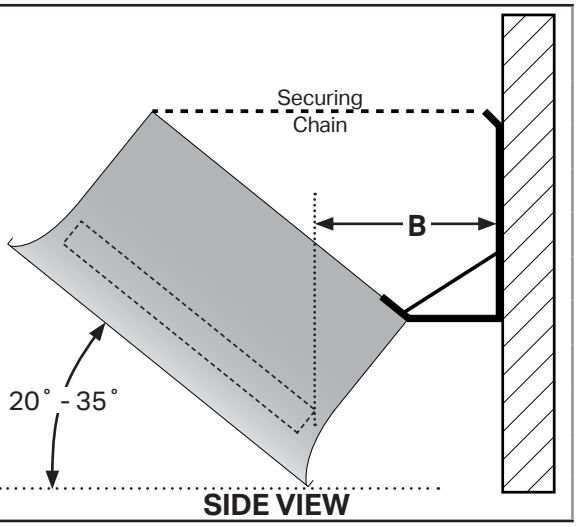

Dim. A: Distance between mounting brackets.
Dim. B: Rear clearance to combustibles.

Ventilation

⚠ WARNING

Insufficient ventilation may result in health problems, carbon monoxide poisoning, or death. Vent enclosed spaces and buildings according to local regulations.

Improper venting may result in asphyxiation, fire, explosion, injury, or death.

This infrared heater operates as an unflued appliance. The flue outlet area of the heater (see Figure 2.3) must remain free of obstructions at all times. Gas pipework, electrical cables, or other combustible items must never be located in the path of the flue discharge.

The space in which the heater is installed in must be properly ventilated to remove the products of combustion and to provide an adequate supply of fresh air. The ventilation must comply with the local codes in force, and must not allow the Carbon Dioxide (CO_2) to exceed 0,28% in areas where it will be inhaled.

Figure 2.3 • Hot Flue Discharge - Side View

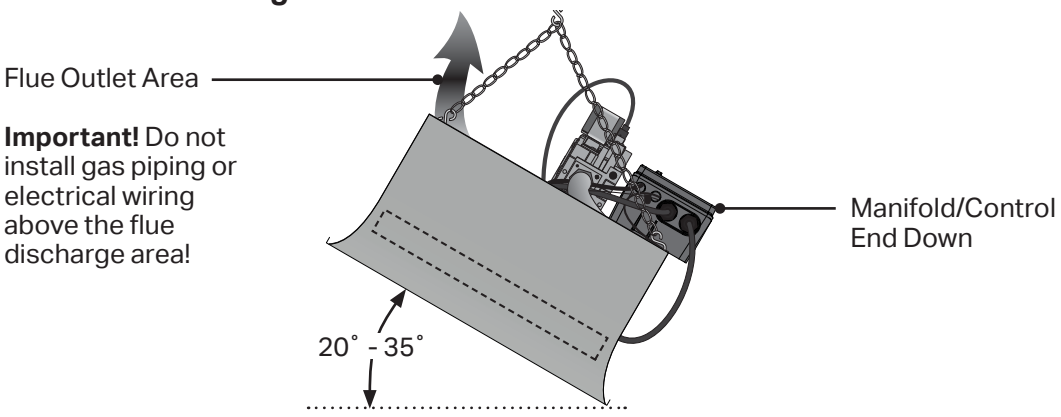

The ventilation requirements sets forth in BS EN13410 (latest edition) must be adhered to. A minimum air displacement of 10,0 m^3 per kWh of total rated heat input is required.

Example: A building structure is utilizing two (2) RV30 infrared heaters in the space. One RV30 has a nominal heat input of 8,79 kWh. Therefore, assuming the total heat input amounts to 17,58 kWh, the ventilation rate requirement would be calculated as follows:

Ventilation Requirement ≥ 17,58 x 10,0 m^3 per hour. x 37.5 m^3/h

≥ 175,80 m^3 per hour

Air displacement for ventilation may be accomplished by thermal evacuation, mechanical evacuation, or natural air changes. Mechanical exhausters are preferred and typically mounted at high points on the roof where stagnant air accumulates inside the building. For a flat roof, prevailing winds, high and low pressure areas, and distribution of air movement must be taken into consideration when locating exhausters. A balanced system is essential to avoid negative building pressure which causes excessive infiltration, unfavorable drafts, and affects combustion efficiency.

NOTE: When heated, materials high in hydrocarbons (solvents, paint thinner, mineral spirits, formaldehydes, etc.) can evaporate. This may result in odors or fumes being emitted into the environment. To correct this problem, clean the area and/or introduce additional ventilation. Heaters installed and serviced in accordance with the installation manual do not emit foul odors into the environment.

Gas Supply

⚠ WARNING

Improperly connected gas lines may result in fire, explosion, poisonous fumes, toxic gases, asphyxiation, serious injury, or death. Connect gas lines in accordance with the regulations listed on page 3.

This heater must be installed and serviced by trained gas installation and service technicians only. All pipework must be supported and installed in accordance with the regulations listed on page 3 and provide the operating gas pressure for the appliance.

- The gas outlet must be in the same room as the appliance and accessible. It may not be concealed within or run through any wall, floor, or partition.
- The gas supply to the heater must terminate with an isolation cock and a flexible connector. This will allow the heater to be disconnected for maintenance or repair.
- Check that the main gas supply line is of proper diameter to supply the required fuel pressures. Pipes of a smaller size than the heater inlet gas connection must **not** be used.
- If utilizing used pipe, verify that its condition is clean and comparable to a new pipe. Test all gas supply lines in accordance with local codes.
- Test and confirm that inlet pressures are correct. Refer to the heater data plate and packaging to verify fuel type.
- Install a sediment trap/drip leg for condensation which may occur at any point of the gas supply line. This will decrease the possibly of loose scale or dirt in the supply line entering the heater's control system and causing a malfunction.
- The final connection is made to the heater's gas valve. The has an Rp 1/2 (DN15)/ ISO 7-1 thread (1/2 inch B.S.P. Internal thread). A flexible metallic hose conforming to BS 6501-1:2004 must be used for this purpose. This must be kept clear of the flue product opening at the top of the heater.
- Take care when making the final connection to the gas valve not to apply excessive force to the valve. The valve inlet may be held using a 40 mm spanner (wrench).

The following information is valid for heaters supplied in the UK and Ireland using either natural gas or propane fuel. Information on converting heaters for use in other European countries is given on page 21.

Table 2.3 • Burner Pressure

Gas Category	Required Burner Pressure	Normal Inlet Pressure	Maximum Inlet Pressure
I_{2H} (G20)	15 mbar	20 mbar	50 mbar
I_{3P} (G31)	25 mbar	37 mbar	50 mbar

NOTE: The gas pressure governor has been factory preset.

Electrical

⚠WARNING

Electric Shock
Field wiring to the heater must be earthed and comply with I.E.E. and local authority recommendations.

A 230 Volt, 50Hz, single-phase supply is required.

Important! Proper earthing and polarity are essential for heaters with spark ignition controls. If the system is not properly earthed, it cannot determine the presence of a flame and will lockout and shut off.

All wiring must comply with I.E.E. and local authority recommendations. The wires in the mains lead used on this appliance are colored in accordance with the following code:

Green and Yellow:	Earth
Blue:	Neutral
Brown:	Live
Black:	Live

The method of connection to the electrical supply must facilitate complete isolation and should preferably be made via a fused double pole isolator having a contact separation of at least 3 mm in all poles and supplying the appliance only. An alternative connection may be made via a fused three-pin plug and an unswitched, shuttered socket both complying with the requirements of BS 1363.

Ensure that live, neutral, and earth are connected correctly as the flame detection circuit will not operate correctly if the polarity of the supply is reversed.

Before field wiring this appliance - Check existing wiring; replace if necessary.

NOTE: If any of the original wire supplied with the appliance must be replaced, it must be replaced with wiring material having a temperature rating of at least 600 V, 105° C.

Figure 2.4 • 230V Circuit Board Internal Wiring Diagram

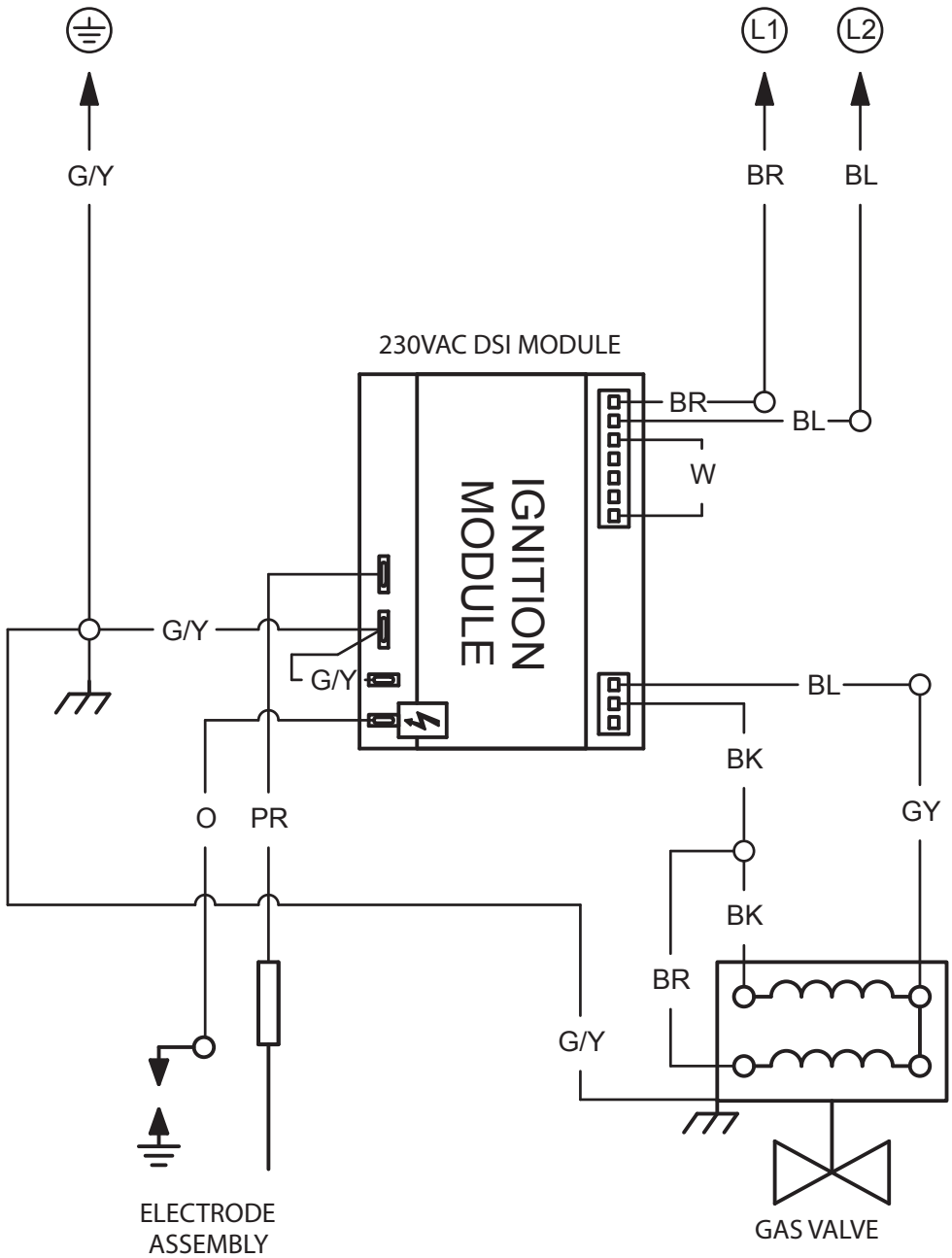

3.0 Operation

Annual Maintenance

⚠ WARNING

Electric Shock - Disconnect power to heater before servicing!

Do not touch the ignition or flame detection electrodes or any part of the ignition/flame detection circuit while power is connected to the heater. The parts carry high voltages at all times and will give an electric shock if touched.

Do not operate unit if repairs are necessary. Do not operate unit if it is showing any signs of burner malfunction. Call a professional for assistance.

⚠ CAUTION

Avoid Equipment Failure.

Do not blow out heating elements with high pressure air.

Annual maintenance is normally sufficient unless abnormal site conditions necessitate that such work be carried out at more frequent intervals (e.g. dusty environment, etc.).

The procedure outlined below should be followed:

❶ Turn **OFF** electrical isolating switch and gas cock.

❷ Remove dirt and other deposits from all heater surfaces. Low pressure compressed air may be used to clean ceramic plaques and venturies.

IMPORTANT: Air hose pressure **must not exceed 200 kPa or 30 psi**. Gently pass the air hose over the entire exposed area of the ceramic. A distance of 61 cm to 122 cm from the unit is recommended. Blowing out the gasket material will permanently damage the rayhead.

❸ If necessary, remove and clean injectors.

❹ Check that:
- All ceramic plaques are free from cracks or other damage.
- The heater fixing arrangements are satisfactory.
- The flue products outlet is free from obstructions.
- The minimum clearances between various heater surfaces and combustible materials are preserved.

❺ Re-commission heater as outlined on page 17.

❻ Switch **OFF** the heater and close gas service cock if heaters are not to be used for an extended period. Periodically inspect the gas supply for signs of corrosion or failure. Replace if necessary.

Pre-Commissioning Check

Inspect ceramic plaques to ensure that none have been damaged. If any cracks are detected, the heater must not be commissioned until the affected burner unit has been replaced (See Section 4.0 Maintenance).

Commissioning

❶ Ensure that the service cock to heater is turned OFF.

❷ Purge air from gas supply and test for gas soundness in accordance with the relevant Standards (see page 3).

❸ Check that all electrical connections are made to the heater and that the unit has a sound earth connection.

❹ Remove operating pressure test point screw (located on outlet of the gas valve) and connect pressure gauge.

❺ Remove inlet pressure test point screw (located on inlet of the gas valve) and connect pressure gauge.

Figure 3.1 • Pressure Gauge Connections

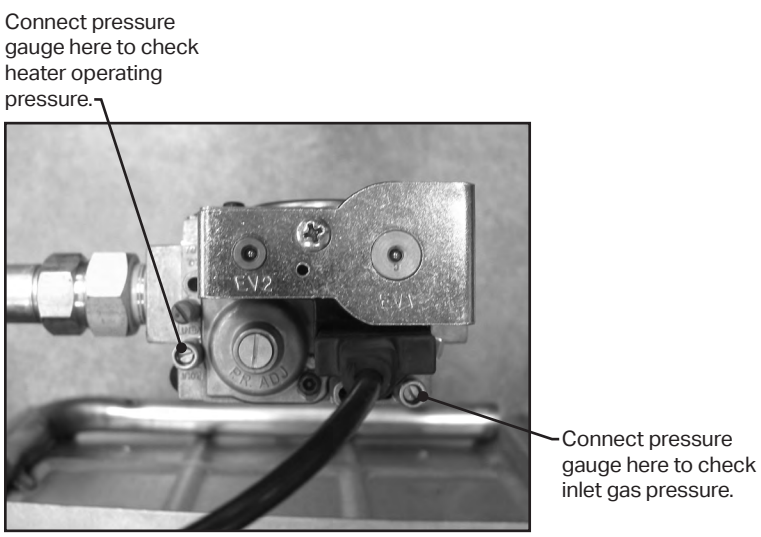

Figure 3.2 • Regulating Screw Set Point

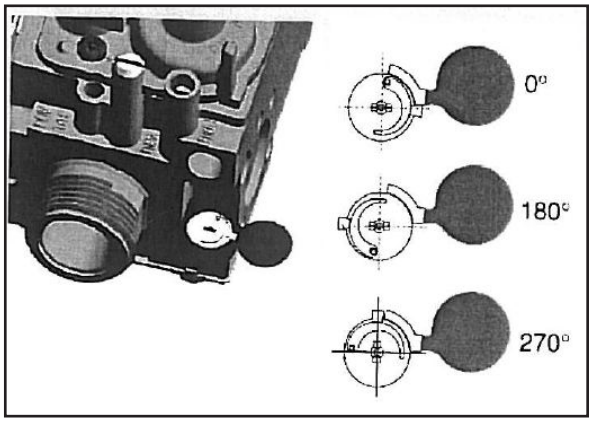

❻ Verify that the regulating screw set point is set to the 270° position as shown in Figure 3.2.

❼ Open the gas service cock.

❽ Switch on the power to the heater via remote electrical switch. After a purge period lasting a few seconds, the solenoid valves will open and the heater will come into operation having been lit by the electrical spark.

❾ Check heater operating gas pressure. This should be in accordance to the pressures listed on page 13 (Table 2.3).

The pressure governor on the gas valve has been factory pre-set to the correct operating pressure. If the correct operating pressure is not measured, then it may be necessary to re-adjust this. Please see page 23 for details on how this is done.

When the correct pressure is measured, switch off the heater. Remove pressure gauges. Replace and ensure test screws are tight and leak tested.

❿ Test supply between service cock and heater for gas soundness.

⓫ If applicable, fit or post advisory/caution plate. The heater is now ready for use.

4.0 Maintenance

Troubleshooting

Table 4.1 • General Troubleshooting

Symptom	Remedy
Power is connected to the heater but nothing happens.	Check electrical supply and all electrical connections. If this reveals nothing, it is likely that the ignition control has failed. Replace control.
The electrode sparks but the heater fails to ignite.	Check the heater inlet gas pressure (test point on gas valve). This should be at least 17 mbar for natural gas or 27 mbar for propane. Check electrode spacing (recommended gap=3 mm). Check operation of gas valve. Replace if necessary. Replace ignition control if the valve is not defective.
The heater ignites satisfactorily, but switches off after a short period.	Check electrode spacing (recommended gap = 3 mm and a 3 mm clearance should be maintained to the surface of the ceramic plaques). If this doesn't resolve the problem, replace ignition control.
A burner does not reach its normal operating temperature (orange color) and a loud roaring noise is audible.	This indicates that the burner has flashed back. This condition is caused by damage to the ceramic plaques. Replace the affected burner assembly.

Replacement Procedures

Figure 4.1 • Replacement of Gas Controller

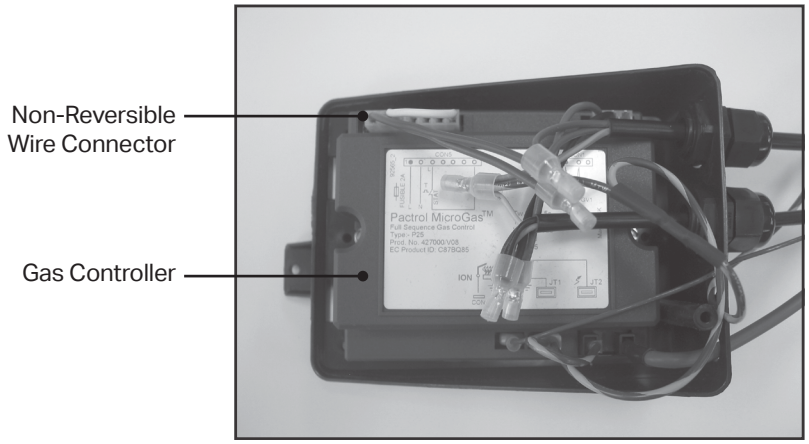

❶ Switch **OFF** electrical supply.

❷ Unscrew the screw which retains the cover of the control enclosure. Remove cover.

❸ Disconnect the spark electrode lead from the control box terminal.

❹ Unscrew the two machine screws which retain the gas controller in place. Disconnect the non-reversible wire connector from the controller. Lift controller clear.

❺ Replace controller and re-assemble.

❻ Re-commission heater.

Figure 4.2 • Replacement of Gas Valve

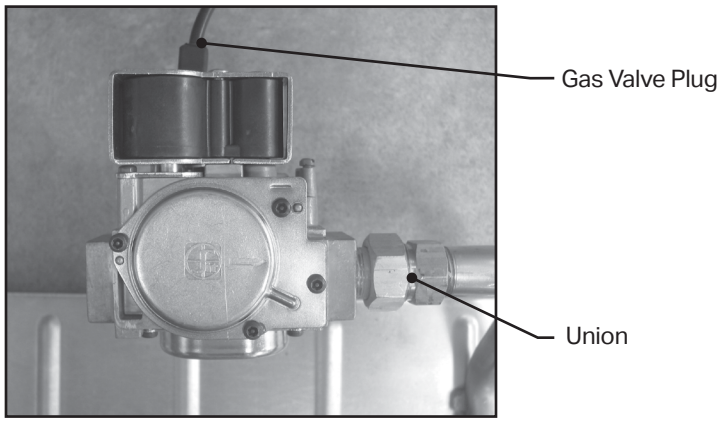

❶ Switch **OFF** electrical and gas supplies.

❷ Disconnect gas valve plug from gas valve.

❸ Disconnect flexible connector from gas valve.

❹ Open the “union” which connects gas train to heater manifold.

❺ Replace gas valve and re-commission heater.

Figure 4.3 • Replacement of Electrode Set

If electrodes are damaged, they must be replaced complete with holder.

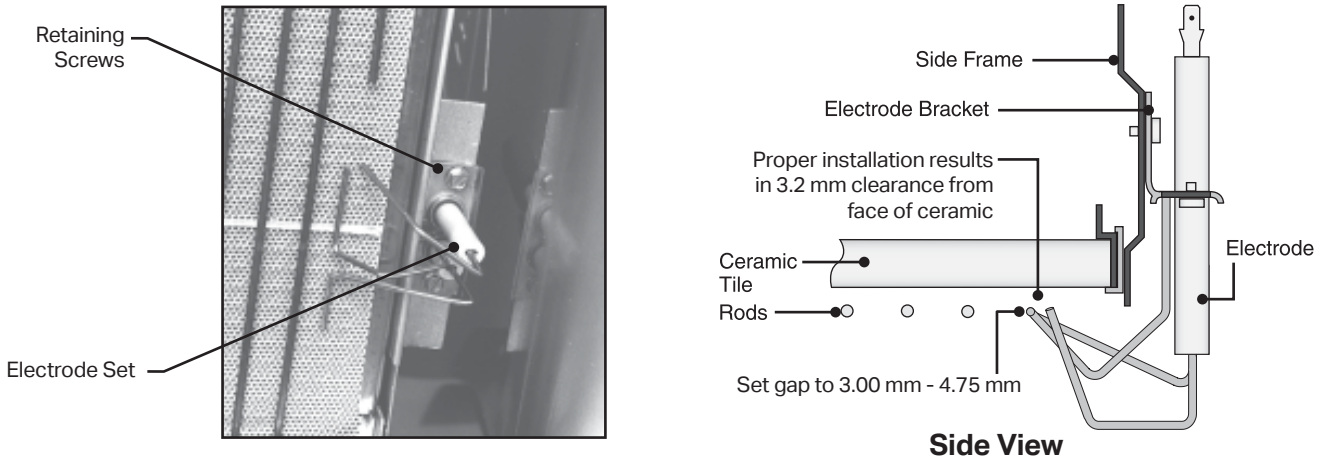

❶ Switch OFF electrical supply and gas service cock.

❷ Disconnect leads from electrodes.

❸ Remove electrode set from mounting bracket by unfastening the retaining screws.

❹ Replace with new electrode set.

❺ Re-assemble and re-commission the heater.

Figure 4.4 • Replacement of Burner Assembly

If the ceramic plaques are damaged, it is necessary to replace the entire burner assembly.

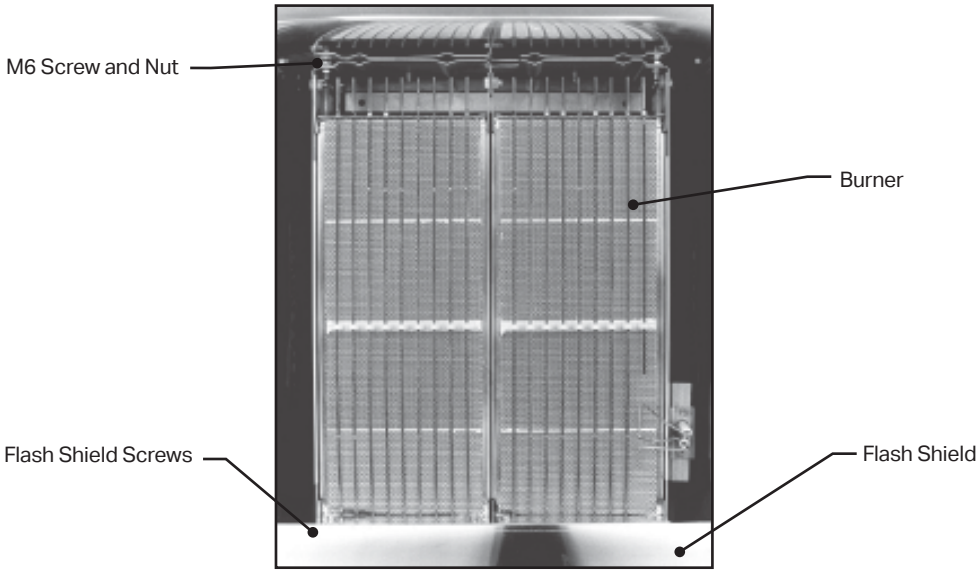

❶ Remove screws which retain the flash shield to the burner(s).

❷ Remove the flash shield.

❸ Remove the four 6 mm nuts and bolts which retain the burner unit to the heater frame.

❹ Remove burner and replace.

❺ Replace the flash shield.

❻ Re-commission the heater.

Converting Heaters from one Gas to Another

Table 4.2 • Suitable Conversions

Model No.	Gas Category	Gas Type	Normal Inlet Pressure	Countries of Use	Notes
RV30 RV50 RV60 RV80 RV90 RV100 RV120 RV130 RV150 RV160	I_{2H}	G20 (Natural)	20 mbar	DK, ES, FI, GB, IE, IT, PT, SE, AT, CH, CY, EE, GR, HR, LT, LV, NO, RO, SI, SK, & TR	Suitable for use without modification
	I_{2E}	G20 (Natural)	20 mbar	DE, PL, LU, & RO	Suitable for use without modification
	I_{2L}	G25 (Town gas)	25 mbar	NL	Injectors must be changed to the sizes given in table 4.3. Adjust the burner pressure to 15,0 mbar after changing injectors. This must be done while the heater is supplied with town gas at an inlet pressure of 25,0 mbar.
	I_{2ELL}	G20 (Natural)	20 mbar	DE, PL, LU, & RO	These are physically identical to the I2H heaters, except that a change of injectors is required when the appliances are to be used on group LL gases (G25 @ 20 mbar). The operating gas pressure of the burner must be reset to 15 mbar after the injectors have been changed.
	I_{2Er}	G20 (Natural)	20/25 mbar	FR, BE	Convert heaters by changing gas valve with a valve which include a flow restrictor instead of a pressure governor.
	I_{3P}	G31 (Propane)	30 mbar	DK, FI, SE, GR, HU, LT, MT, NL, NO & RO	Check burner presure and reset to 25,0 mbar during heater comissioning. See page 17.
	I_{3P}	G31 (Propane)	37 mbar	BE, ES, FR, GB, IE, IT, PT, PL, CH, CZ, GR, HR, LU, SI & SK	Suitable for use without modification
	I_{3P}	G31 (Propane)	50 mbar	DE, NL, AT, HU & SK	Check burner presure and reset to 25,0 mbar during heater comissioning. See page 17.
RV50 RV80	I_{2E}	G20 (Natural)	20 mbar	DE	
	I_{3P}	G31 (Propane)	50 mbar	DE	Check burner presure and reset to 25,0 mbar during heater comissioning. See page 17.

Table 4.3 • Injector Sizes

Model No.	Number of Injectors	Injector Size I_{2H}, I_{2E+} and I_{2ELL} Heaters (Nat Gas - G20)		Injector Size I_{2L}, and I_{2ELL} Heaters Using group L and LL gases (Nat Gas - G25)		Injector Size I_{3P} Heaters (LPG - Propane - G31)	
		(mm)	Marking	(mm)	Marking	(mm)	Marking
RV 30	1	2.25	43	2.50	40	1.65	52
RV 50	2	2.15	44	2.35	42	1.55	53
RV 60	2	2.25	43	2.50	40	1.65	52
RV 80	3	2.15	44	2.35	42	1.55	53
RV 90	3	2.25	43	2.50	40	1.65	52
RV 100	3	2.35	42	2.60	38	1.65	52
RV 120	4	2.25	43	2.50	40	1.65	52
RV 130	4	2.35	42	2.60	38	1.65	52
RV 150	5	2.35	42	2.60	38	1.65	52
RV 160	5	2.35	42	2.60	38	1.65	52

Converting a Heater from Natural Gas (I_{2H}) to Propane (I_{3P})

1. If the heater is already installed, switch **OFF** the gas and electricity then remove the heater to the ground level.
2. Remove the gas injectors.
3. Replace the injectors with the correctly sized injectors for propane (see Table 4.3).
4. Re-install heater and connect electrical and gas supply.
5. Connect gas pressure gauge to operating pressure test point on the outlet of the gas valve (see commissioning on page 17).
6. Switch **ON** the heater.
7. Read the operating pressure from the pressure gauge. This must be adjusted to **25 mbar**.
8. Remove the sealing ring on the governor adjusting screw. Turn the screw clockwise to increase the gas pressure to **25 mbar** (see pressure adjustment on page 23).
9. When burner pressure has stabilized at **25 mbar**, switch **OFF** the heater.
10. Remove pressure gauge and replace pressure test point screw.
11. Re-seal the governor adjusting screw using the sealing ring.
12. Replace or amend the heater data badge to show that the heater has been adjusted for Cat. I3P.

Converting a Heater from Propane (I_{3P}) to Natural Gas (I_{2H})

1. If the heater is already installed, switch **OFF** the gas and electricity then remove the heater to the ground level.
2. Remove the gas injectors.
3. Replace the injectors with the correctly sized injectors for natural gas (see Table 4.3).
4. Re-install heater and connect electrical and gas supply.
5. Connect gas pressure gauge to burner pressure test point on the outlet of the gas valve (see commissioning on page 17).
6. Switch **ON** the heater.
7. Read the burner pressure from the pressure gauge. This must be adjusted to **15 mbar**.
8. Remove the sealing ring on the governor adjusting screw. Turn the screw counter-clockwise to reduce the gas pressure to **15 mbar**.
9. When burner pressure has stabilized at **15 mbar**, switch **OFF** the heater.
10. Remove pressure gauge and replace pressure test point screw.
11. Re-seal the governor adjusting screw using the sealing ring.
12. Replace or amend the heater data badge to show that the heater has been adjusted for Cat I_{2H}.

Converting a Heater for Operation on Nat. Gas (I_{2E+}) in France or Belgium

Follow the procedure outlined above for conversion of a heater for operation on I_{2H}.

The gas valve on the heater (SIT valve model 0.840.061) must be replaced with a different valve (SIT valve model 0.830.010). This valve incorporates a gas flow adjuster instead of a governor. Follow the procedure outlined in Figure 4.2 - Replacement of Gas Valve; page 19.

The burner pressure **must** be adjusted to **15 mbar** as described above.

Seal the flow rate adjuster screw using the sealing ring.

Replace or amend the heater data badge to show that the heater has been adjusted for Cat I_{2E+}.

WARNING: **The inlet gas pressure must not exceed 20 mbar for G20 or 25 mbar for heaters equipped with a flow adjuster.**

Converting a Heater for Operation on Group LL Nat. Gas (I_{2ELL}) in Germany

Follow the procedure outlined on page 22 for conversion of a heater for operation on natural gas.

Replace the injectors with the correctly sized injectors for Group LL Natural Gas (see Table 4.3 on page 21).

Adjust the burner pressure to **15 mbar** using the procedure given on the previous page.

Seal the flow rate adjuster screw using the sealing ring.

Replace or amend the heater data badge to show that the heater has been adjusted.

Converting a Heater for Operation on Natural Gas (I_{2L}) in the Netherlands

Follow the procedure outlined on page 22 for conversion of a heater for operation on natural gas.

Replace the injectors with the correctly sized injectors for Group L Natural Gas (see Table 4.3 on page 21).

With an inlet gas pressure of **25 mbar**, adjust the operating pressure to **15 mbar** using the procedure given on the previous page.

Seal the flow rate adjuster screw using the sealing ring.

Replace or amend the heater data badge to show that the heater has been adjusted for I_{2ELL}.

Adjusting the Gas Pressure

The gas pressure is adjusted using the pressure adjusting screw on the SIT valve. On valve type 0.840.061 with governor, the screw is rotated clockwise to increase the pressure.

The pressure adjusting screw is covered by a sealing ring. This must be removed prior to making any adjustments and replaced afterwards.

Figure 4.5 • Gas Valve Pressure Adjusting Screw

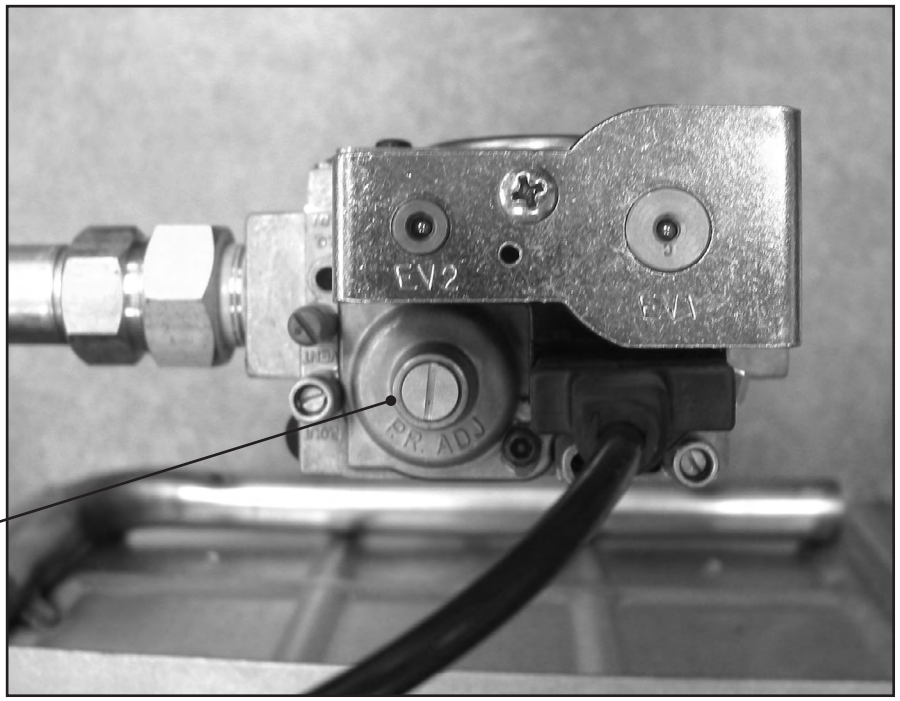

5.0 Parts

Table 5.1 • Heater Components Parts List

Part Description	Stock No.	Part Description	Stock No.
Electrical Parts Reference List			
Electrode Set (3-prong)	32-508	230V 3-Core Wire (560 mm)	DR-3CW
RV-230V Gas Valve - SIT 0.840.061	TP-740B	230V Junction Box Bottom	DR-PJBB
RV-230V Circuit Board (Gas Controller)	DR-230VCBA	230V Junction Box Cover	DR-PJBT
RV-230V Wiring Harness	DR-WH230	High Voltage Ignition Wire	HVW-18
RV-230V Valve Cord	DR-VC230	Low Voltage Ignition Wire	LVW-18
RV-230V Strain Relief Terminal	DR-SRT230	Red Rubber Spark Boot	DR-RSB
Burner Related Parts Reference List			
Rayhead with Center Support	DR-RH	Injector 2.15 mm	ORF#44
Rayhead no Center Support (RV 30 LP)	DR-RHP	Injector 2.25 mm	ORF#43
Long Rayhead Rod	DR-LROD	Injector 2.35 mm	ORF#42
Igniter Rayhead Rod	DR-SROD	Injector 2.45 mm	ORF#41
Injector 1.55 mm	ORF#53	Injector 2.60 mm	ORF#38
Injector 1.65 mm	ORF#52		
Nuts & Bolts Reference List			
1/4-10 Short Electrode Mounting Screw	DR10-EMS	1/4-20 Hex Nut (mates to DR-20STB)	DR-20HN
#8 x 1/2" Sheet Metal Self-tap Screw	DR-8STS	1/4-20 x 1/2" Self-tap Bolt	DR-20STB
#8 x 1/2" Common Sheet Metal Screw	DR-8SMS	Union Fitting, 3-piece	DR-MU
1/4 - 20 x 1/2" Machine Screw	DR-20MB		
Core Components Reference List			
Manifold (*specify 1-5)	DR-MAN^	Side Frame	DR-SF
Upper Frame (*specify 1-5)	DR-UF^	Electrode Mounting Bracket	DR-EMB
Heat Shield (*specify 1-5)	DR-HS^	Side Frame Insert	DR-SFI
Flash Shield (*specify 1-5)	DR-FLSH^	Embossed Reflector Sides	DR-ERS
Reflector End (*specify 1-5)	DR-RFE^	Cross-over Bracket	DR-CO
Full Reflector Assembly (*specify 1-5)	DR-^REF		

***** (**1**=RV 30; **2**=RV 50-60; **3**=RV 80-100; **4**=RV 120-130; **5**=RV 150-160). **^** Specify model number.

NOTE: Replacement burners are called "rayheads". Ceramic plaques are not sold separately, order DR-RH.
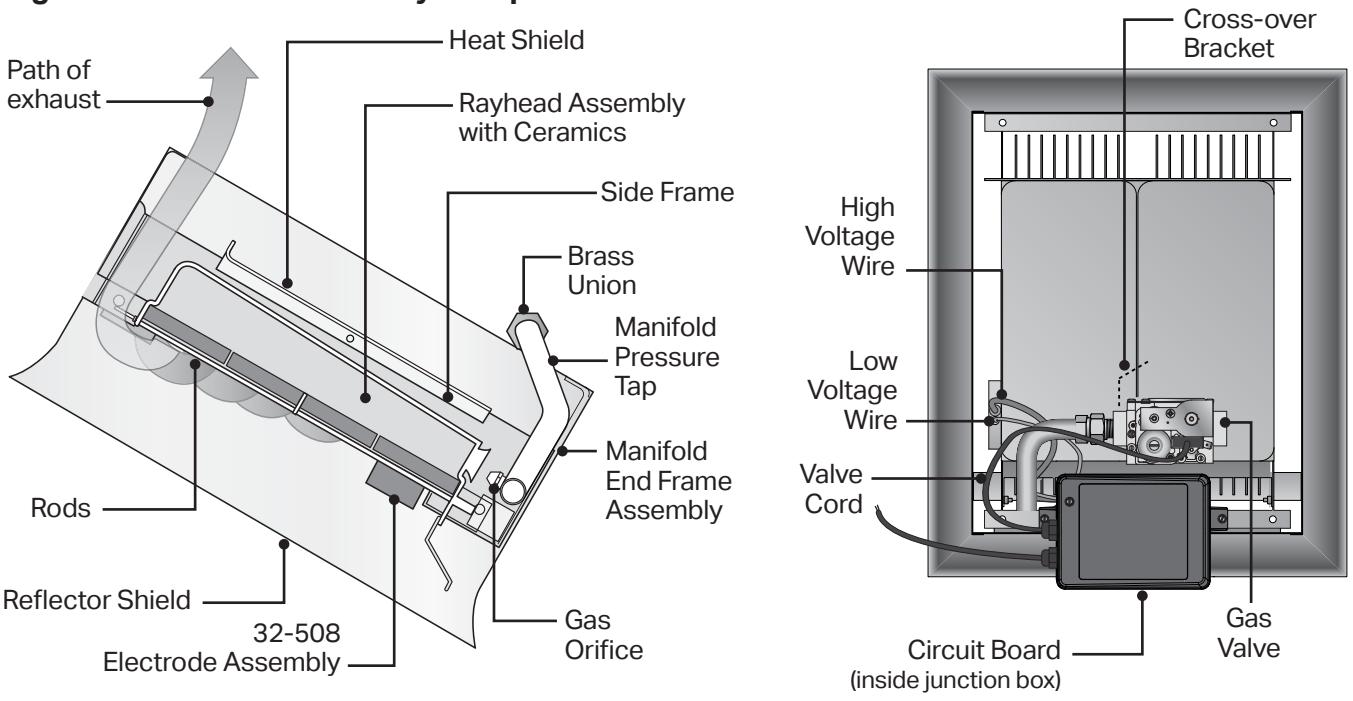
Figure 5.1 • Heater Assembly Components