REV Series
Installation Manual

C US

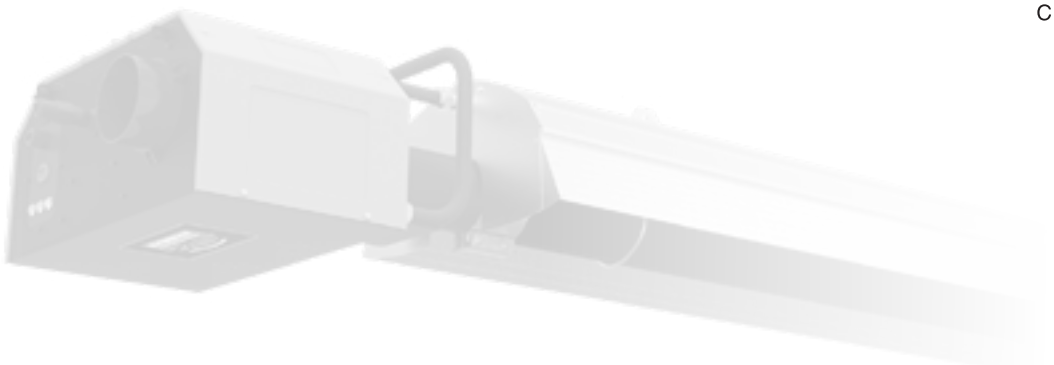

The REV Series infrared tube heater is a positive pressure, two stage radiant heater system. This manual provides specific information related to the REV Series models. All persons involved with the installation, operation, and maintenance of the heater system must read and understand the information in this manual.

⚠ WARNING

Improper installation, adjustment, alteration, service, or maintenance can cause property damage, injury, or death. Read the installation, operation, and maintenance instructions thoroughly before installing or servicing this equipment.

This heater **must** be installed and serviced by trained gas installation and service personnel only. Failure to comply could result in personal injury, asphyxiation, death, fire, or property damage.

Do not store or use gasoline or other flammable vapors and liquids in the vicinity of this or any other appliance.

In locations used for the storage of combustible materials, signs **must** be posted to specify the maximum permissible stacking height to maintain the required clearances from the heater to the combustibles. Signs must either be posted adjacent to the heater thermostat or, in the absence of such thermostat, in a conspicuous location.

Do not use this heater in indoor living or sleeping quarters, etc.! Installation of a tube heater system in residential indoor living spaces may result in property damage, serious injury, asphyxiation, or death.

For Your Safety

If you smell gas:

- Do not try to light any appliance.
- Do not touch any electrical switch.
- Do not use any phone in your building.
- Immediately call your gas supplier from a neighbor's phone.
- Follow the gas supplier's instructions.
- If you cannot reach your gas supplier, call the fire department.

INSTALLER: Present this manual to the end user.
Keep these instructions in a clean and dry place for future reference.

Model#: _____ **Serial #:** _____
(located on rating label)

LIOREV-Rev. 34721
Print: XM-10/23 (DRPC)

Contents

1.0 Introduction

Overview

The intent of this manual is to provide information regarding safety, design guidelines, installation, operation, and maintenance of the tube heater. You must read and understand the instructions and all safety warnings before installing the tube heater. This manual is property of the owner, and must stay with the owner or unit after the installation is complete.

Heater Components

Prior to installation, verify that the heater's gas type and voltage (as listed on the rating plate) match that of your application. Also, verify that you have received all heater contents included with your tube heater. Reference page 68 for a list of the kit contents for your model heater. Materials not included in the heater kit contents (e.g., screws, vent material, terminals, etc.) are the responsibility of the installer. Notify your product representative or Detroit Radiant Products of any discrepancy or missing kit contents prior to installing unit.

Specifications

Chart 1.1 • REV Series Specifications

Model Number	Gas Type (select one)	Maximum Input (MBH)	Minimum Input (MBH)	Length	Standard Weight (lbs.)	Recommended Mounting Height*	Baffle Quantity	Combustion Chamber (Black Coated)	Radiant Emitter Tube(s) (Black Coated)
REV-20-65	Nat. or Prop.	65	50	21'-9"	206	9' to 14'	5	Alum	Alum
REV-20-75	Nat. or Prop.	75	50	21'-9"	206	10' to 15'	5	Alum	Alum
REV-30-65	Nat. or Prop.	65	50	31'-5"	289	10' to 15'	4	Alum	Alum
REV-30-75	Nat. or Prop.	75	50	31'-5"	289	11' to 18'	5	Alum	Alum
REV-30-100	Nat. or Prop.	100	65	31'-5"	289	12' to 20'	5	Alum	Alum
REV-40-65	Nat. or Prop.	65	50	41'-1"	362	11' to 18'	3	Alum	Alum
REV-40-75	Nat. or Prop.	75	50	41'-1"	362	11' to 18'	4	Alum	Alum
REV-40-100	Nat. or Prop.	100	65	41'-1"	362	12' to 20'	4	Alum	Alum
REV-40-125	Nat. or Prop.	125	82	41'-1"	362	13' to 23'	5	Alum	Alum
REV-40-150	Nat. or Prop.	150	100	41'-1"	362	14' to 25'	5	Titan-Alum	Alum
REV-50-125	Nat. or Prop.	125	82	50'-9"	450	15' to 27'	3	Alum	Alum
REV-50-150	Nat. or Prop.	150	100	50'-9"	450	15' to 27'	3	Titan-Alum	Alum
REV-50-175	Nat. or Prop.	175	125	50'-9"	450	16' to 30'	3	Titan-Alum	Alum
REV-50-200	Nat. or Prop.	200	145	50'-9"	450	17' to 35'	2	Titan-Alum	Alum
REV-60-150	Nat. or Prop.	150	100	60'-5"	523	16' to 30'	2	Titan-Alum	Alum
REV-60-175	Nat. or Prop.	175	125	60'-5"	523	16' to 30'	2	Titan-Alum	Alum
REV-60-200	Nat. or Prop.	200	145	60'-5"	523	17' to 35'	2	Titan-Alum	Alum

* Recommended mounting heights are provided as a guideline. Actual conditions may dictate variations from this data. Do not mount below 8 feet.

Titan-Alum = Titanium-stabilized black-coated aluminized treated steel.
Alum = Black-coated aluminized treated steel.

⚠ WARNING

Read and understand all safety information and warnings in this manual before installation, operation, and maintenance of the radiant tube heater system.

Safety Labels and Their Locations

Product safety signs or labels should be replaced by the product user when they no longer are legible. Contact either your local distributor or the product manufacturer for obtaining replacement signs or labels.

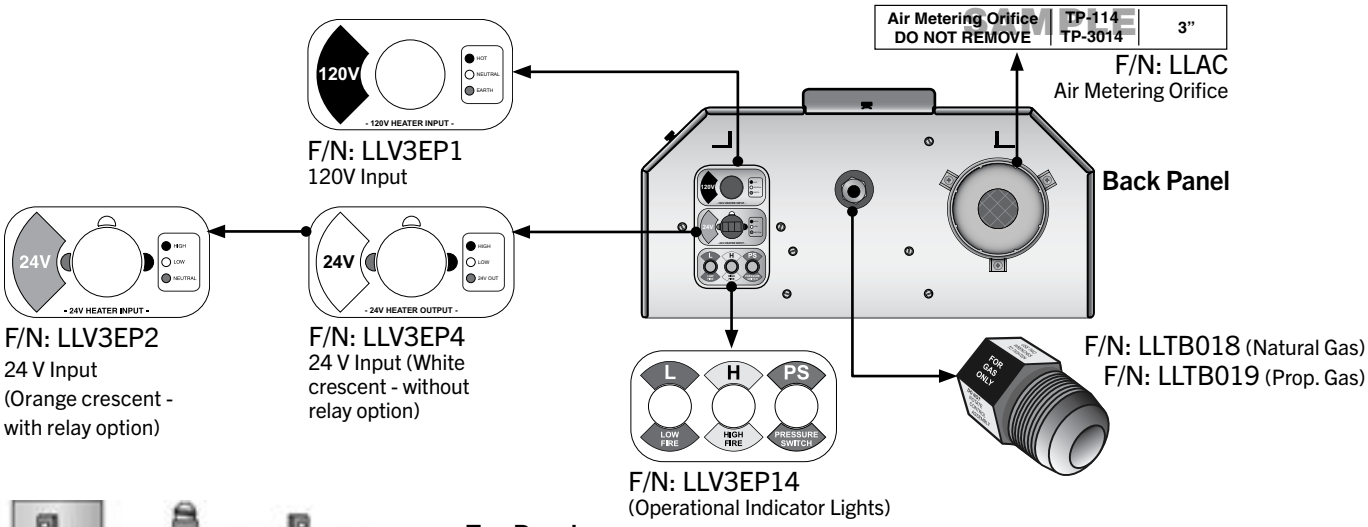

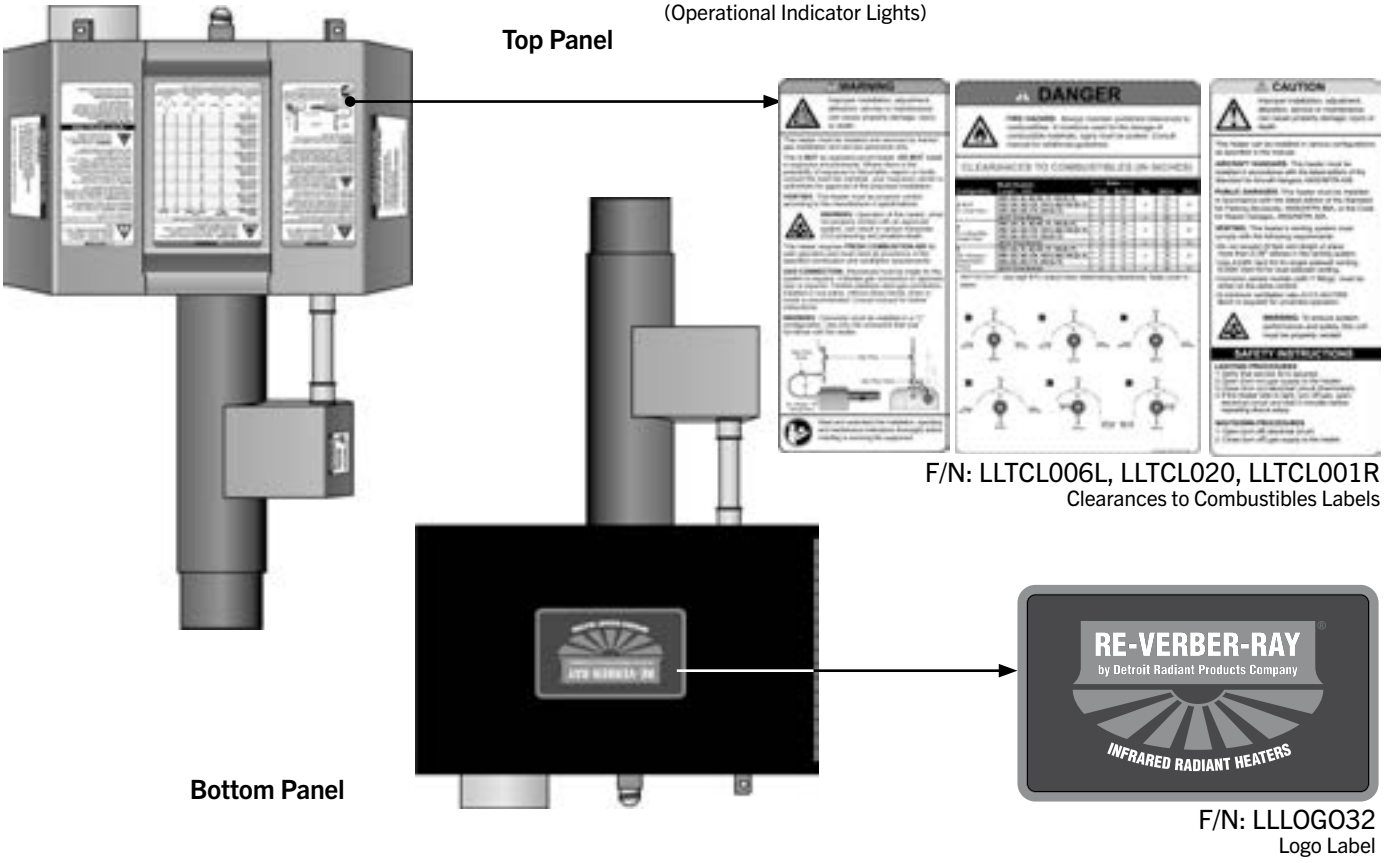

SERVICE ACCESS PANEL

IGNITER & FLAME SENSE COMPARTMENT

1. Turn off gas & electricity.
2. Remove cover by lifting top cover upward and outward.

CAUTION: HOT SURFACE.
KEEP COVER IN PLACE. REMOVE FOR SERVICE ONLY.

F/N: LLTB026

SERVICE ACCESS PANEL

CONTROLS & GAS VALVE COMPARTMENT

1. Disconnect gas & electricity.
2. Remove four (4) thumbscrews.
3. Remove top cover.
4. Swing hinged panel downward.

KEEP COVER IN PLACE. REMOVE FOR SERVICE ONLY.

F/N: LLTB024L

REV-40-125N VERSION 01/22
SERIAL NUMBER: 2201XXXXXXXXXX 0001 OPTIONS None
PRODUCTION CODE: REV-C1

BILL OF MATERIALS

COMPONENT	PART NO.	DESCRIPTION	COMPONENT	PART NO.	DESCRIPTION
CIRCUIT BOARD	TP-651B	*Fenwal*	[illegible]	TP-5EA	*1/20 hp Inducer Assy*
GAS VALVE	TP-3140	*24VAC Two Stage*	[illegible]	333	*Blk Conduit Connector*
GAS INLET	TP-84	*1/2" NPT to Flange*	[illegible]	N/A	*N/A*
IGNITER	TP-50A	*Glo-Bar*	STARTER TUBE	TP-3380	*NSI-Starter Tube*
IND. LIGHT #1	TP-828	[illegible] Ind. Light	TERMINAL BLOCK	N/A	*N/A*
IND. LIGHT #2	TP-828	[illegible] Ind. Light	TRANSFORMER	TP-826	*120Pri 24Sec*
IND. LIGHT #3	TP-1425	[illegible] LED Ind. Light	WIRE HARNESS	TP-3252	*Wire Harness*

MODEL SPECIFIC DATA			TUBE & REFLECTOR PARTS		
AIR ORIFICE SIZE	TP-3014	*1 5/8*	BAFFLE	TP-651	*5*
BURNER	TP-3072	*Green*	COMB. TUBE	TP-26B	*10' Aluminized Tube*
GAS ORIFICE SIZE		*22 DMS*	HANGERS	TP-XXX	*REV Hanger*
1ST PRES. SWITCH	TP-1264A	*Diff. Pressure Switch*	REFLECTORS	TP-XXX	*REV*
2ND PRES. SWITCH	N/A	*N/A*	RADIANT TUBE	TP-26A	*4' Aluminized*
WIRING DIAGRAM	LLWTXXX	*Rev. 1*	TUBE CLAMP	TP-21B	*4" Gein Clamp*

SAMPLE

Please contact the factory for assistance, parts information and/or list prices at 586-756-0950 or visit store.reverberray.com

Burner Control Box Component Label (located inside the center compartment lid)

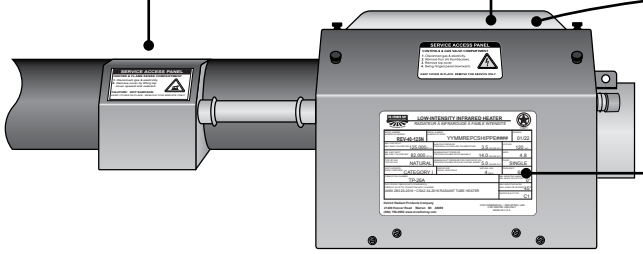

Controls Compartment

RE-VERBER-RAY Detroit Radiant Products Company

LOW-INTENSITY INFRARED HEATER
RADIATEUR À INFRAROUGE À FAIBLE INTENSITÉ

MODEL NUMBER / NUMÉRO DE MODÈLE: REV-40-125N	SERIAL NUMBER / NUMÉRO DE SÉRIE: YYMMREPCSHIPPE####	VERSION: 01/22
MAX. HEAT INPUT / MAX. DÉBIT CALORIFIQUE: 125,000 BTU/h	MANIFOLD PRESSURE / PRESSION À LA TUBULURE D'ALIMENTATION: 3.5 INCHES W.C.	VOLTAGE: 120 VAC
MIN. HEAT INPUT / MIN. DÉBIT CALORIFIQUE: 82,000 BTU/h	MAXIMUM INLET PRESSURE / PRESSION D'ALIMENTATION MAXIMALE: 14.0 INCHES W.C.	AMPS: 4.8
TYPE OF GAS / TYPE DE GAZ: NATURAL	MINIMUM SUPPLY PRESSURE FOR PURPOSE OF ADJUSTMENT / PRESSION DU GAZ MIN. ADMISE: 5.0 INCHES W.C.	PHASE: SINGLE
VENT CATEGORY / EVENT CATÉGORIE: CATEGORY I	ORIFICE SIZE / DIAMÈTRE DU INJECTEUR: NATURAL GAS 4 D.M.S.	FREQUENCY: 60 Hz
COMBUSTION CHAMBER: TP-26A		MIN. MOUNTING ANGLE / MIN. ANGLE DE SUPPORT: 0°
THIS DESIGN COMPLIES WITH STANDARD(S) / CIMPLES DE CETTE CONCEPTION AVEC LA NORME: ANSI Z83.20-2016 • CSA2.34-2016 RADIANT TUBE HEATER		MAX. MOUNTING ANGLE / MAX. ANGLE DE SUPPORT: 45°
		HEATER BUILD TYPE: C1

SAMPLE

Detroit Radiant Products Company
21400 Hoover Road Warren MI 48089
(586) 756-0950 www.reverberray.com

FOR COMMERCIAL / INDUSTRIAL USE.
FOR INDOOR USE ONLY.
MADE IN U.S.A.

Rating Plate

SERVICE ACCESS PANEL

FAN COMPARTMENT

1. Disconnect gas & electricity.
2. Remove top cover (2 thumbscrews).
3. Remove six (6) 1/4" screws.
4. Lift and remove panel.

KEEP COVER IN PLACE. REMOVE FOR SERVICE ONLY.

F/N: LLTB025R

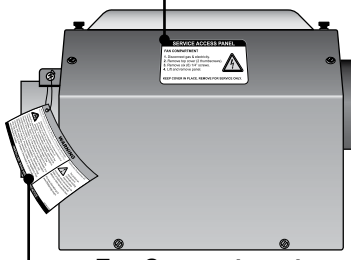

Fan Compartment

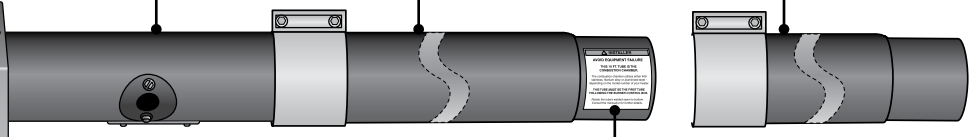

INSTALLER

AVOID EQUIPMENT FAILURE

THIS 10 FT. TUBE IS THE COMBUSTION CHAMBER.

The combustion chamber utilizes either 409 stainless, titanium alloy or aluminized steel - depending on the model number of your heater.

THIS TUBE MUST BE THE FIRST TUBE FOLLOWING THE BURNER CONTROL BOX.

Rotate the tube's welded seam to bottom. Consult the manual(s) for further details.

F/N: LLTB004 (orange)
(150,000-200,000 BTU/h models)

WARNING

Avoid Serious Injury, Death, or Property Damage.
Maintain Clearances to Combustible to Prevent the Risk of Fire.

Clearances to combustibles must be maintained at all times in order to prevent the ignition of combustible materials. In locations used for the storage of combustible materials, signs must be posted to specify the maximum permissible stacking height to maintain the required clearances from the heater to the combustibles. Signs must either be posted adjacent to the heater's thermostats or, in the absence of such thermostats, in a conspicuous location. Clearances are provided on the heater's safety label and in the heater's Installation, Operation, and Maintenance manual. Product installation and operation must comply with applicable standards, codes, and regulations. Post this tag adjacent to the heater's thermostat or controls before operating the heater.

California Proposition 65

This product can expose you to chemicals including lead and carbon monoxide, which are known to the State of California to cause birth defects or other reproductive harm.

For more information go to www.P65Warnings.ca.gov.

LL001 | 408-63116 (CDS)

- INSTALLER: READ AND POST THIS NOTICE -

F/N: LL001 - Clearance Safety Tag
(Affix adjacent to heater's thermostat)

2.0 Safety

Read and understand all safety information and warnings in this manual prior to installation, operation, and maintenance of this heater. Warnings indicate a potentially hazardous situation which, if not avoided, could result in injury or death.

⚠ WARNING

Improper installation, adjustment, alteration, service, or maintenance can cause property damage, serious injury, or death. Read and understand the installation, operation, and maintenance instructions thoroughly before installing or servicing this equipment. Only trained, qualified gas installation and service personnel may install or service this equipment.

Warning Symbols

Safety is the most important consideration during installation, operation and maintenance of the tube heater. You will see the following symbols and signal words when there is a hazard related to safety or property damage.

⚠ WARNING — **Warning** indicates a potentially hazardous situation which, if not avoided, could result in death or injury.

⚠ CAUTION — **Caution** indicates a potentially hazardous situation which, if not avoided, could result in minor or moderate injury.

NOTICE — **Notice** indicates a potentially hazardous situation which, if not avoided, could result in property damage.

Applications

This is **not** an explosion proof heater. No tube heater may be used in a Class 1 or Class 2 Explosive environment. Consult your local fire marshal, insurance carrier, and other authorities for approval if the proposed installation is in question.

Commercial / Industrial Applications

Unless otherwise indicated, tube heaters are designed and certified for use in industrial and commercial buildings such as warehouses, manufacturing plants, aircraft hangars, and vehicle maintenance shops. For maximum safety, the building must be evaluated for potential problems before installing the heating system. A critical safety factor to consider before installation is the clearances to combustibles.

⚠ WARNING

Not For Residential Use. Installation of a commercial tube heater system in residential indoor spaces or sleeping quarters such as bedrooms or basements may result in property damage, serious injury, or death.

Standards, Certifications, and Government Regulations

Installation of this tube heater must conform with all applicable local, state, and national specifications, regulations, and building codes. Contact the local building inspector and/or fire marshal for guidance.

In the absence of local codes, the installation must conform to the latest edition of:

United States: National Fuel Gas Code, ANSI Z223.1 (NFPA 54), NFPA 30A, NFPA 52

Canada: CAN/CGA B149.1 and .2, Canadian Electrical Code C22.1

Copies of the Standards can be viewed or purchased at www.nfpa.org or www.scc.ca.

Maintenance Facilities:

This heater must be installed in accordance with the latest edition of the Standard for Parking Structures, ANSI/NFPA 88A or the Code for Motor Fuel Dispensing Facilities, NFPA 52 Vehicular Natural Gas Fuel Systems Code, and Repair Garages ANSI/NFPA 30A. In Canada, refer to CAN/CGA B149.1 and B149.2.

- Heaters must not be installed less than 8 feet (2.4 m) above the floor. Minimum clearances to combustibles must be maintained from vehicles parked below the heater.
- When installed over hoists, minimum clearances to combustibles must be maintained from the upper most point of objects on the hoist.

Aircraft Hangars:

This heater must be installed in accordance with the latest edition of the Standard for Aircraft Hangars, ANSI/NFPA 409. In Canada, refer to CAN/CGA B149.1 and B149.2.

- In aircraft storage and servicing areas, heaters shall be installed at least 10 feet from above the upper surface of wings or of the engine enclosures of the highest aircraft that may be housed in the hangar. The measurement shall be made from the wing or engine enclosure, whichever is higher from the floor, to the bottom of the heater.
- In areas adjoining the aircraft storage area (e.g., shops, offices) the bottom of heaters shall be installed no less than 8 feet (2.4 m) above the floor.
- Suspended or elevated heaters shall be located in spaces where they shall not be subject to damage by aircraft, cranes, movable scaffolding, or other objects.

Provisions shall be made to ensure accessibility to suspended tube heaters for recurrent maintenance purposes.

⚠ WARNING

California Proposition 65

This product can expose you to chemicals including lead and carbon monoxide, which are known to the State of California to cause birth defects or other reproductive harm.

For more information, go to www.P65Warnings.ca.gov.

Clearances to Combustibles

A critical safety factor to consider before installation is the clearances to combustibles. **Clearance to combustibles** *is defined as the minimum distance you must have between the tube surface, or reflector, and the combustible item*. Considerations must also be made for moving objects around the tube heater. The following is a partial list of items to maintain clearances from:

Combustible items:

- Wood
- Paper
- Fabric
- Chemicals
- Paint
- Plastic
- Parked vehicles
- Gasoline
- Storage racks

Moving Objects:

- Overhead doors
- Vehicle lifts
- Cranes
- Hoists

Hazards:

For maximum safety the building must be evaluated for hazards before installing the heating system. Examples include, but are not limited to:

- Gas and electrical lines
- Combustible and explosive materials
- Chemical storage areas
- Areas of high chemical fume concentrations
- Provisions for accessibility to the heater
- Adequate clearances around air openings
- Combustion and ventilating air supply
- Vehicle parking areas
- Vehicles with lifts or cranes
- Storage areas with stacked materials
- Lights
- Sprinkler heads
- Overhead doors and tracks
- Dirty, contaminated environment

⚠ WARNING


Placement of explosive objects, flammable objects, liquids, and vapors close to the heater may result in explosion, fire, property damage, serious injury, or death. Do not store or use explosive objects, liquids, or vapor in the vicinity of the heater.

⚠ CAUTION

Children and adults should be alerted to the hazards of high surface temperatures and should stay away to avoid burns or clothing ignition.

Young children should be carefully supervised when they are in the same space as the heater.

Clothing or other flammable materials should not be hung from the heater, or placed on or near the heater.

Any guard or other protective device removed for servicing the heater must be replaced prior to operating the heater.

Installation and repair should be done by a qualified service person. The heater should be inspected before use and at least annually by a qualified service person. More frequent cleaning may be required as necessary. It is imperative that the control compartment, air passageways, and burner(s) of the heater be kept clean.

When installing the tube heating system, the minimum clearances to combustibles for your series tube heater and system configuration must be maintained. These distances are shown in Chart 2.1 on page 9 and on the burner control box. If you are unsure of the potential hazards, consult your local fire marshal, fire insurance carrier, or other qualified authorities on the installation of gas fired tube heaters for approval of the proposed installation.

In locations used for the storage of combustible materials, signs must be posted to specify the maximum permissible stacking height to maintain the required clearances from the heater to the combustibles. Signs must either be posted adjacent to the heater's thermostat or in a conspicuous location.

The stated clearance to combustibles represents a surface temperature of 90°F (50°C) above room temperature. Building materials with a low heat tolerance (such as plastics, vinyl siding, canvas, tri-ply, etc.) may be subject to degradation at lower temperatures. It is the installer's responsibility to ensure that adjacent materials are protected from degradation.

⚠ WARNING

Failure to comply with the stated clearances to combustibles may result in personal injury, property damage, and/or death.

Chart 2.1 • Clearances to Combustibles in Inches

Configuration	Model Number (Length) - MBH	Sides Front	Sides Behind	Top	Below	End
A, B, C *0°–Dual Pass*	**REV (20, 30, 40)-65, 75, 100 [N, P]**	28	28	2	72	12
	REV (40, 50)-125, 150 & (60)-150 [N, P]	37	37		81	
	REV (50, 60)-175, 200 [N, P]	47	47		97	
	20-Ft. From Burner	11	11	2	55	12
D *0°–Ultra-Wide Single Pass*	**REV (20, 30, 40)-65, 75, 100 [N, P]**	18	18	2	72	12
	REV (40, 50)-125, 150 & (60)-150 [N, P]	27	27		81	
	REV (50, 60)-175, 200 [N, P]	34	34		97	
	20-Ft. From Burner	10	10	2	55	12
E *35°–Forward Shield/Open Throw*	**REV (20, 30, 40)-65, 75, 100 [N, P]**	43	10	4	59	12
	REV (40, 50)-125, 150 & (60)-150 [N, P]	57	10		76	
	REV (50, 60)-175, 200 [N, P]	70	15		94	
	20-Ft. From Burner	22	10	4	46	12

NOTE: Use high BTU output when determining clearances.

Figure 2.1 • Mounting Configurations

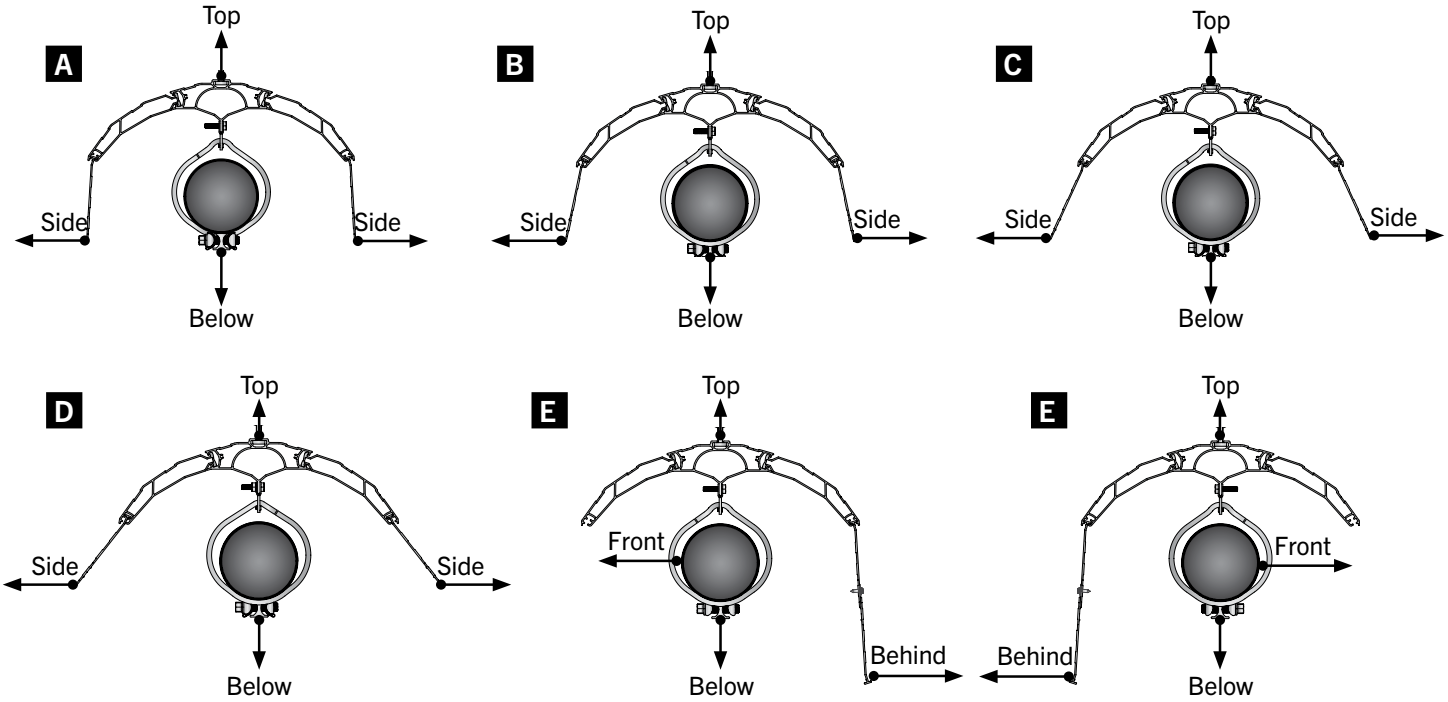

3.0 Installation

⚠ WARNING

Improper installation, adjustment, alteration, service, or maintenance can cause property damage, serious injury, or death.

Read and understand the installation, operation, and maintenance instructions thoroughly before installing or servicing this equipment.

Only trained, qualified gas installation and service personnel may install or service this equipment.

Design Considerations and Prechecks

Placement of infrared heaters is influenced by many factors. Aside from safety factors, considerations such as the number of heaters or vent elbows that are allowed, maximum vent lengths, ducting of combustion air, and combining exhaust vents are a few examples. The installation manual, along with national, state, and local codes, address these issues. It is critical that you read, understand, and follow all guidelines and instructions.

To ensure a properly designed heating system, a layout should be developed for the correct placement of the burner control box, tubes, vents, and combustion air intake ducts. Inspect and evaluate the mounting conditions, vent locations, gas supply, and wiring.

When designing an infrared radiant heating system, consider the following:

- Has the building's heat loss been evaluated?
- Does the design meet the needs of the space?
- Have recommended mounting heights been observed?
- Have all clearances to combustibles situations been observed?
- Is the supply (burner) end of the heater located where more heat is required?
- Is it best to offset the heaters and/or rotate the reflectors towards the heat zone?
- Does the heater require outside fresh air for combustion?
- Is the environment harsh or contaminated (requiring outside air for combustion)?
- Are chemicals or vapors a concern (requiring outside air for combustion or additional ventilation)?

IMPORTANT: Fire sprinkler heads must be located at an appropriate distance from the heater. This distance may exceed the published clearances to combustibles as posted on the heater. Certain applications may require the use of high temperature sprinkler heads or relocation of the heaters.

Sprinkler systems containing propylene glycol or other flammable substances are not to be used in conjunction with this heater without careful consideration for and avoidance of potential fire or explosion hazards. For further information consult NFPA 13.

The effective infrared surface temperature of a person or object may be diminished with wind velocities above 5 mph. The use of adequate wind barrier(s) may be required.

Chart 3.1 • Recommended Mounting Heights and Coverages

NOTE: This chart is provided as a guideline. Actual conditions may dictate variation from this data.

Model	BTU Range	Recommended Mounting Height (ft.)	Distance Between Heaters (ft.) Dimension A	Distance Between Heater Rows (ft.) Dimension B	Maximum Distance Between Heaters and Wall (ft.) Dimension C
20 ft.	65 MBH	10’ - 16’	10’ - 20’	20’ - 40’	16’
	75 MBH	12’ - 20’	20’ - 30’	30’ - 50’	18’
30 ft.	65 MBH	10’ - 16’	10’ - 20’	20’ - 40’	17’
	75-100 MBH	12’ - 20’	20’ - 30’	30’ - 50’	20’
40 ft.	65 MBH	10’ - 16’	10’ - 20’	20’ - 40’	20’
	75-125 MBH	12’ - 20’	20’ - 30’	30’ - 50’	20’
	150 MBH	16’ - 30’	30’ - 40’	40’ - 60’	25’
50 ft.	125 MBH	15’ - 25’	20’ - 30’	30’ - 50’	25’
	150-200 MBH	16’ - 30’	30’ - 40’	40’ - 60’	25’
60 ft.	150-200 MBH	17’ - 40’	30’ - 40’	40’ - 60’	25’

Factory recommended mounting heights are listed as a guideline. If infrared heaters are mounted too low or too high, they may result in discomfort or lack of heat. Detroit Radiant Products Company generally recommends observing the recommended mounting heights to optimize comfort conditions. However, certain applications such as spot heating, freeze protection, outdoor patio heating, or very high ceilings may result in the heaters being mounted outside of the factory recommended mounting heights.

Figure 3.1 • Mounting Height Dimensions (see Chart 3.1 for dimensions)

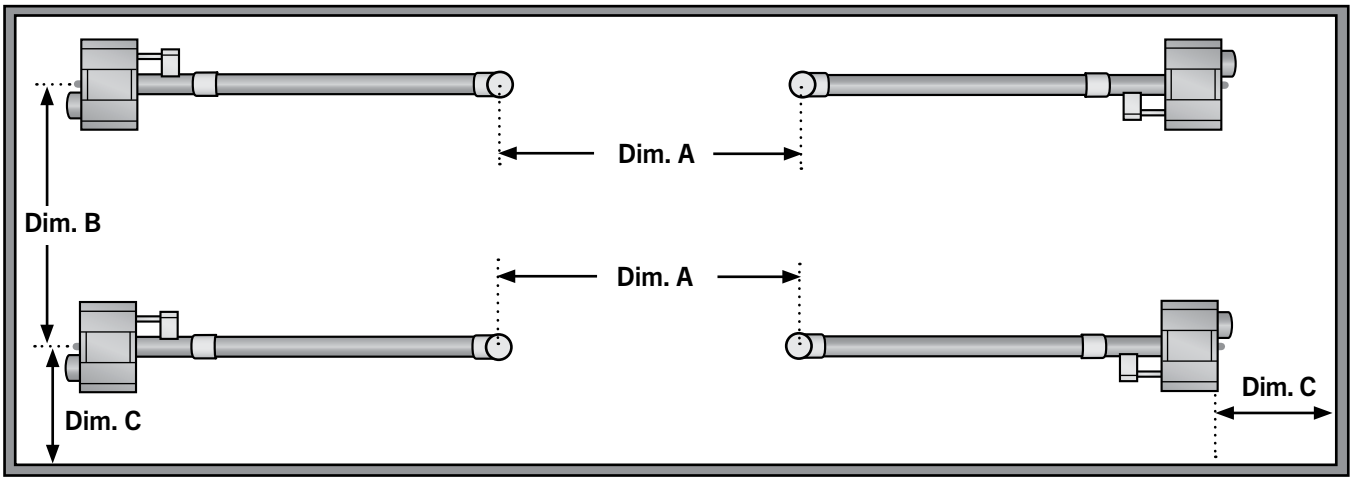

NOTE: Dimensions A, B, & C are based upon heaters hung at the factory recommended mounting height.

Heater Suspension and Placement

⚠ WARNING

Improper suspension of the tube heater may result in collapse and being crushed. Always suspend from a permanent part of the building structure that can evenly support the total force and weight of the heater.

Failure to maintain minimum clearances to combustibles may result in fire and/or explosion, property damage, serious injury, or death. Always maintain minimum clearances and post clearance safety limit signs or the clearance safety tag where needed.

Suspension of the heater must conform to applicable codes referenced in the Safety section and these instructions.

❶ Lay all radiant tubing out in the following order. Position tubes in approximate location (see Figure 3.2).

- 10 ft. primary combustion chamber.

  Important! 150,000-200,000 BTU/h models must use the 10 ft. titanium alloy treated combustion chamber as the first tube downstream of the burner control box. The combustion chamber has an orange identification sticker located on the swaged end of the tube.

- Radiant emitter tubes.

❷ Mark locations for hanging points.

NOTE: If the available hanging points do not allow for the recommended spacing then additional hanging tabs (P/N: TP-4079) may be necessary.

- The spacing between the burner control box mounting brackets and the first suspension point should be approximately 2’-4”.
- The space between the first two suspension points placed on the first tube, should be approximately 8’-10”.
- The space between suspension points thereafter, one per tube, should be approximately 9’-8”.

Figure 3.2 • Heater Mounting Layout

NOTE: A sticker identifying the combustion chamber(s) is located on the swaged end of the tube.

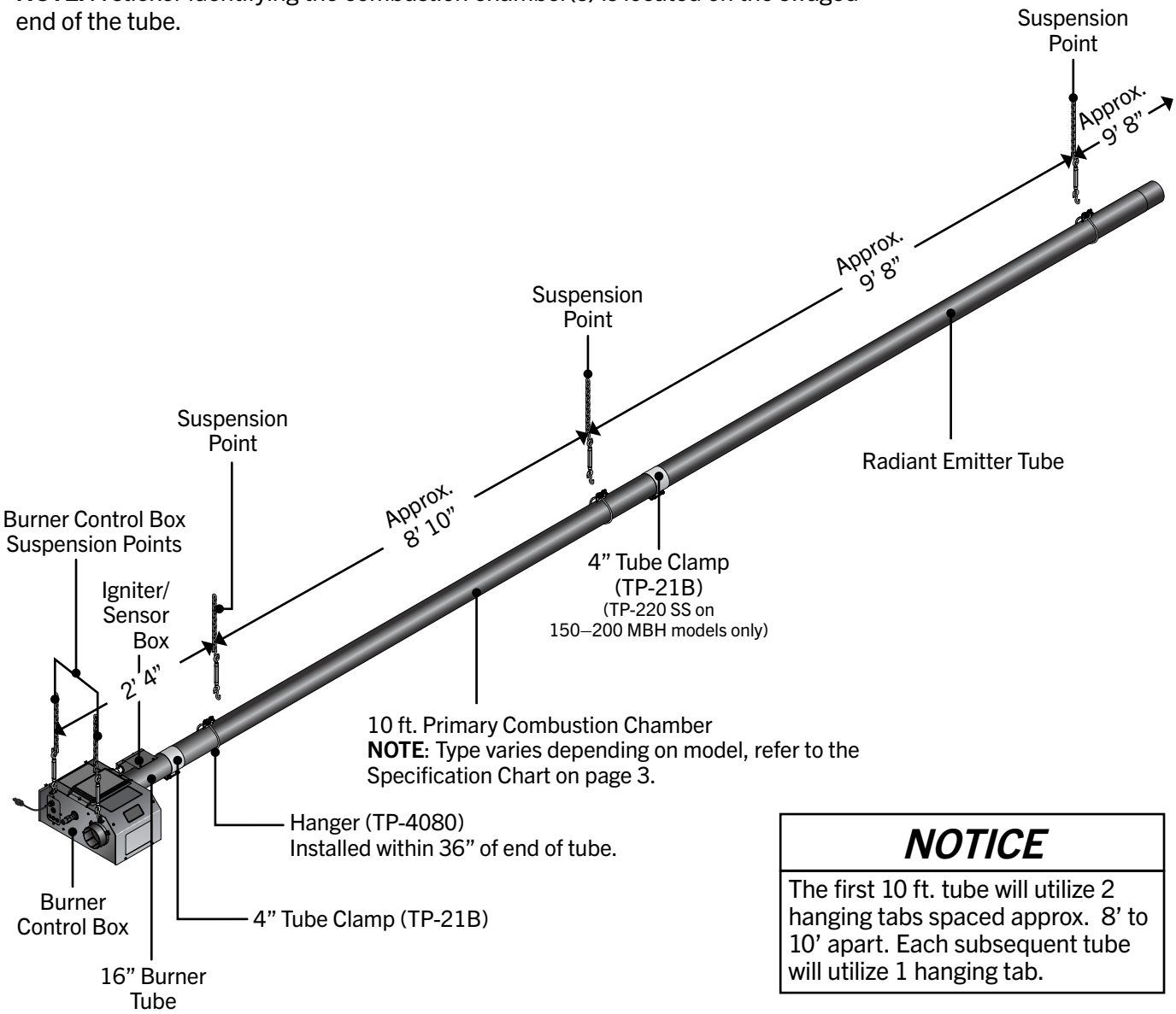

NOTICE

The first 10 ft. tube will utilize 2 hanging tabs spaced approx. 8' to 10' apart. Each subsequent tube will utilize 1 hanging tab.

Chart 3.2 • Heater Mounting Requirements and Weights

Model	Length	Suspension Points/ Hanging Tabs	Control Box Suspension Points	Shipping Weight	Chain Set Qty.
20 ft.	21'-9" / 261"	3	2	265 lbs.	5
30 ft.	31'-5" / 377"	4	2	360 lbs.	6
40 ft.	41'-1" / 493"	5	2	430 lbs.	7
50 ft.	50'-9" / 609"	6	2	525 lbs.	8
60 ft.	60'-5" / 725"	7	2	650 lbs.	9

❸ Prepare mounting surface and, if necessary, weld blocks and/or drill holes (see Figure 3.3).
NOTE: The burner control box and radiant tubes should be in straight alignment and level.

❹ Fasten beam clamp, screw hook, or other type of suspension anchor to hanging point.

❺ **IF USING CHAINS:** Attach and close S-hook (P/N: S-HOOK-SS) and #1 double-loop chain (P/N: THCS-REV) to anchor. Check that it is securely attached. **NOTE:** Threaded rod and turnbuckles may be used.

❻ **IF USING GRIPPLE:** (P/N: THGHxx) Pass the loop end of the cable through the hook. Thread the other end through the loop, the locking fastener, the hanger, and back up through the locking fastener. Adjust to appropriate length. **NOTE:** Threaded rod and turnbuckles may be used.

❼ Attach hanging tabs to chains. Adjust chain lengths until radiant tubing is level and equal weight distribution is achieved. Chains must be straight up and down. Do not install chains at an angle.

NOTICE

The desired suspension material shall have a minimum workload rating of 310 lbs.

Improper suspension of the tube heater may result in collapse and being crushed. Always suspend from a permanent part of the building structure that can evenly support the total force and weight of the heater.

Figure 3.3 • Mounting the Hangers

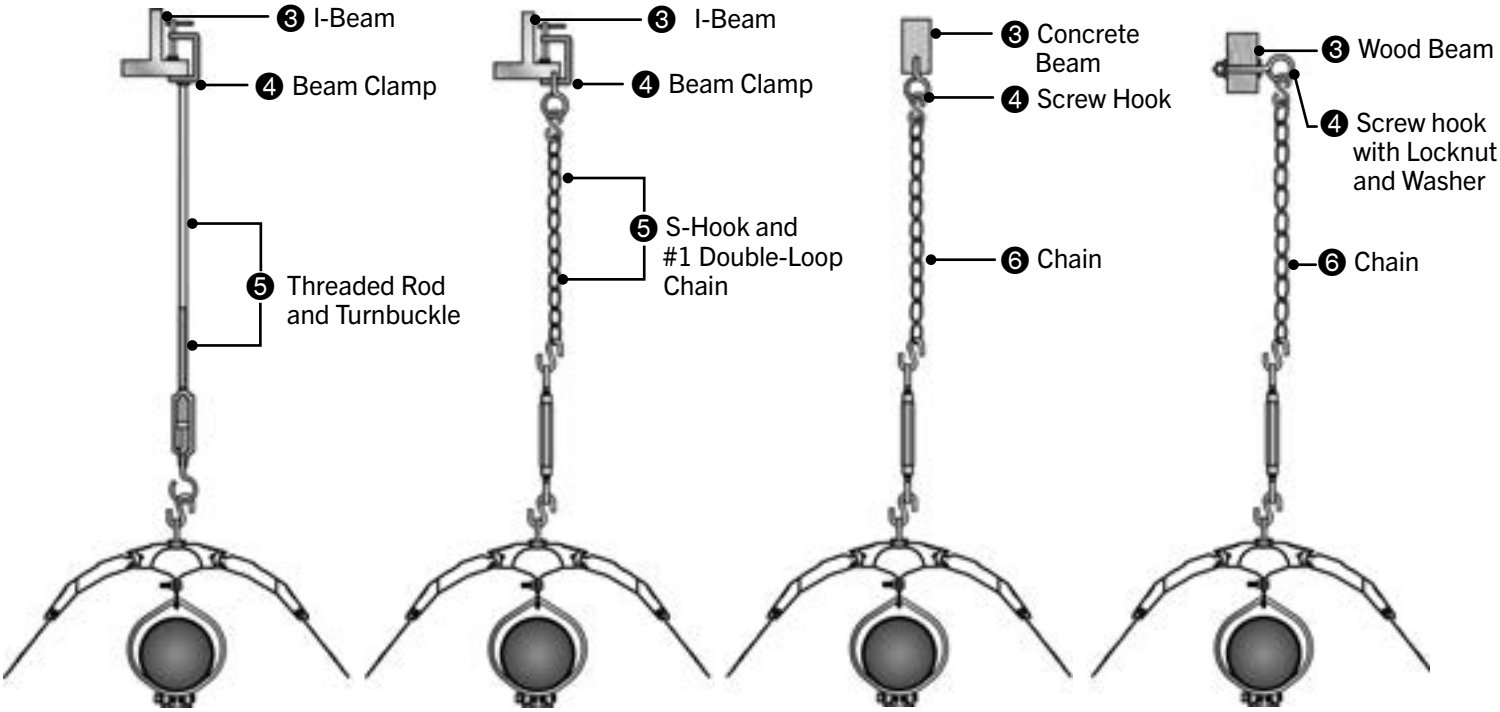

Available Configurations

Before beginning heater installation, it is necessary to determine the desired mounting configuration. Refer to Clearances to Combustibles and Design Considerations on pages 8–11.

Ultra-Wide, Single Pass

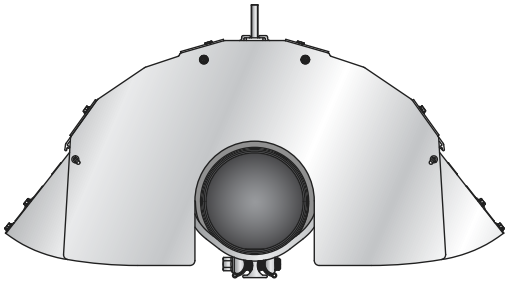

Wide, Dual Pass

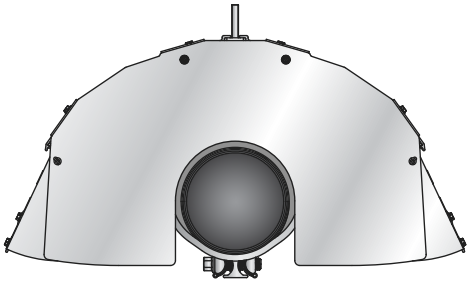

Neutral, Dual Pass

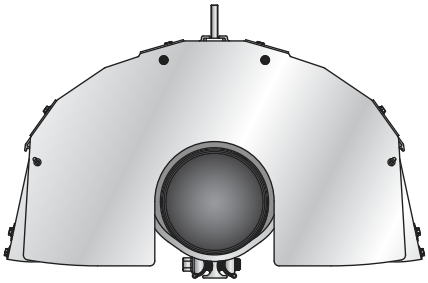

Narrow, Dual Pass

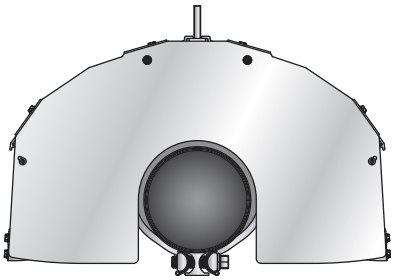

Open Throw/35°

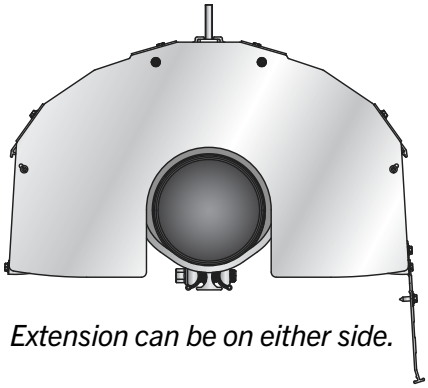

Extension can be on either side.

Tube and Reflector Installation

❶ After determining mounting locations, begin by fastening all tube hangers to each core (P/N: TP-4020) using the supplied ¼"–20 bolts and nuts (two [2] each per hanger), and position the hangers using the pre-drilled holes in each core (see Figure 3.4). **NOTE:** The first 10 ft. combustion tube will utilize two (2) hangers and each subsequent tube will utilize one (1) hanger.

Figure 3.4 • Attach Hangers

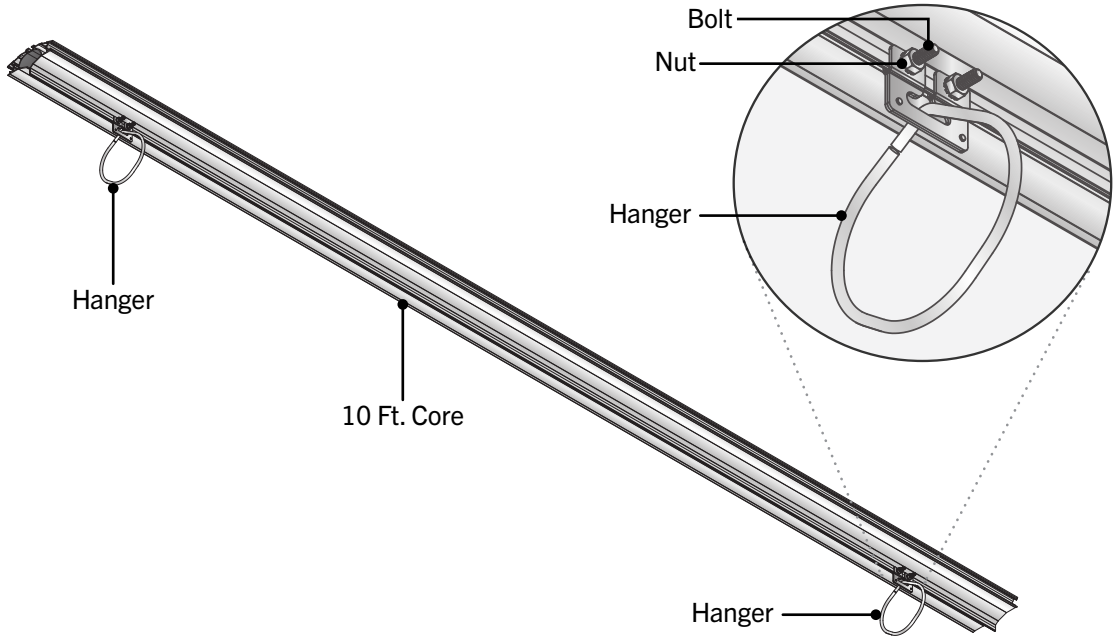

❷ Beginning with first 10 ft. core (with two [2] hangers), insert two (2) 5 ft. wings into core. Position first two hanging tabs in the sliding track within 36 in. from each end (see Figure 3.5). Raise to desired mounting height.

Figure 3.5 • Wing Installation

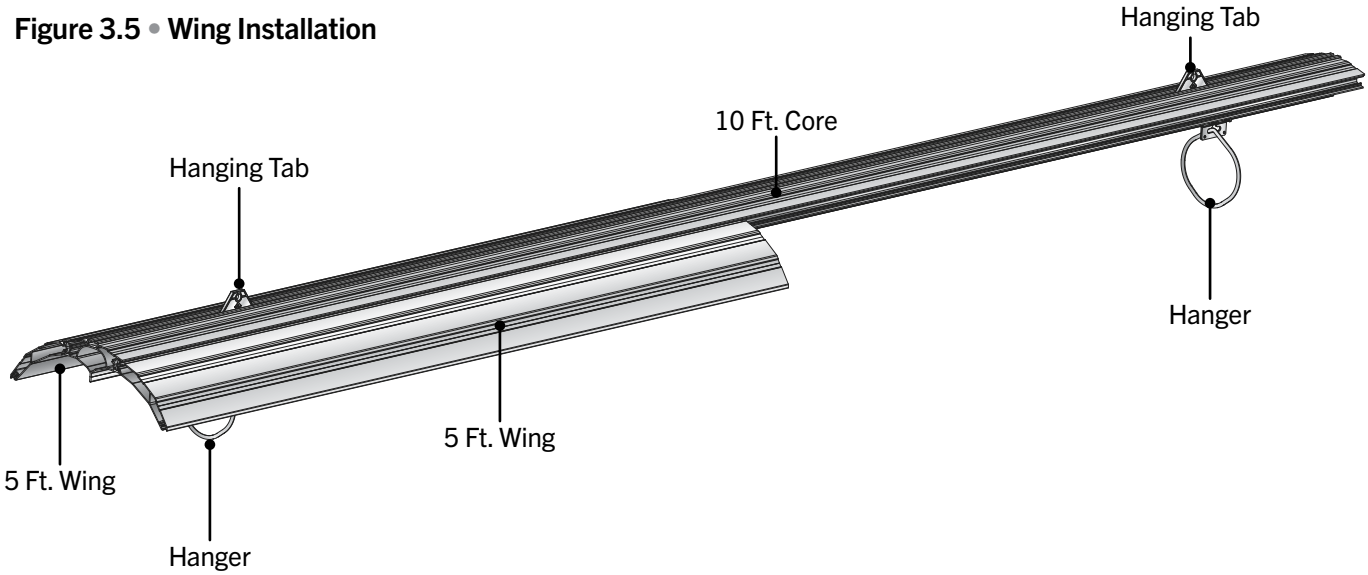

❸ Insert one (1) 10 ft. wing into core assembly, ensuring the end of the first wing remains flush with the end of the core. Refer to Figure 3.6.

Figure 3.6 • Wing Installation (cont.)

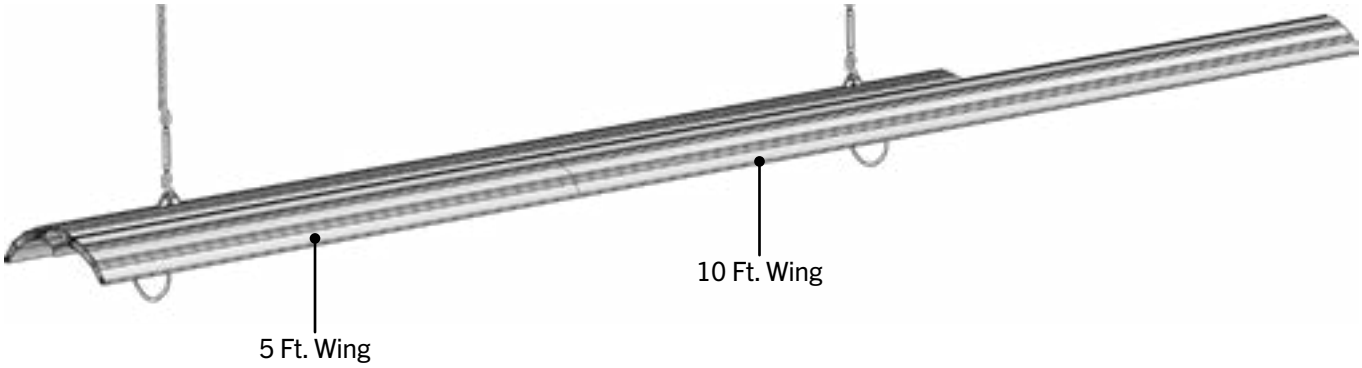

❹ Slide one (1) hanging tab into the track of the next core, then slide the core onto the previously installed wing. Secure cores together using one (1) connection bracket and two (2) #8 screws as shown in Figure 3.7.

❺ Insert one (1) 10 ft. wing on the opposing side until it is flush with previously installed 5 ft. long wing. Secure reflector connection brackets in channel on core using two (2) #8 screws as shown in Figure 3.7.

Figure 3.7 • Core Installation

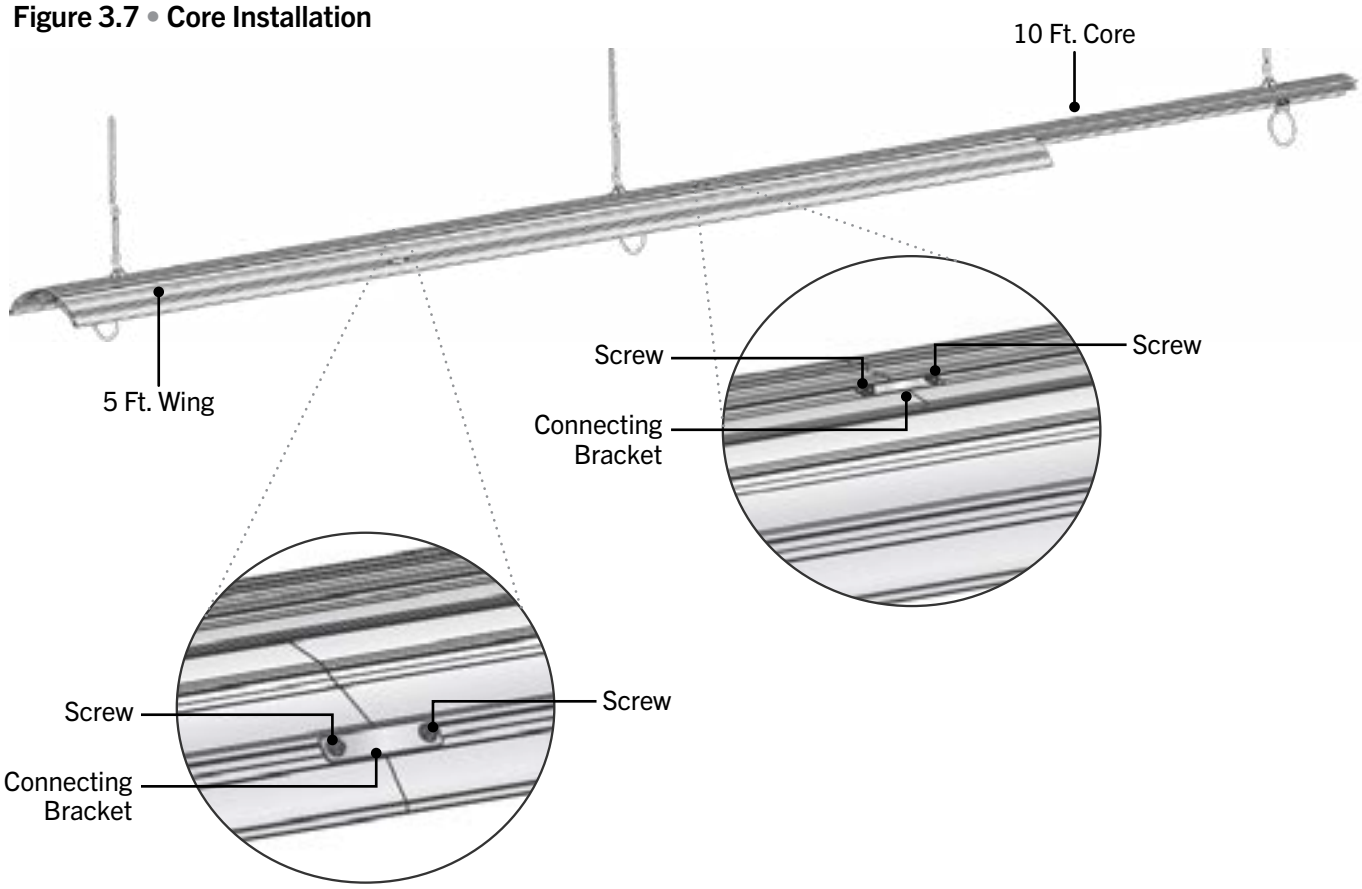

❻ Repeat Steps 3–5 until all 10 ft. wings are in place. Insert remaining 5 ft. wings. Confirm entire assembly is level front to back.

❼ Beginning with combustion chamber, insert swaged end of the radiant tube, seam down, through hanger #2, then slide the unswaged end back through hanger #1 (see Figure 3.8).

Figure 3.8 • Tube Installation

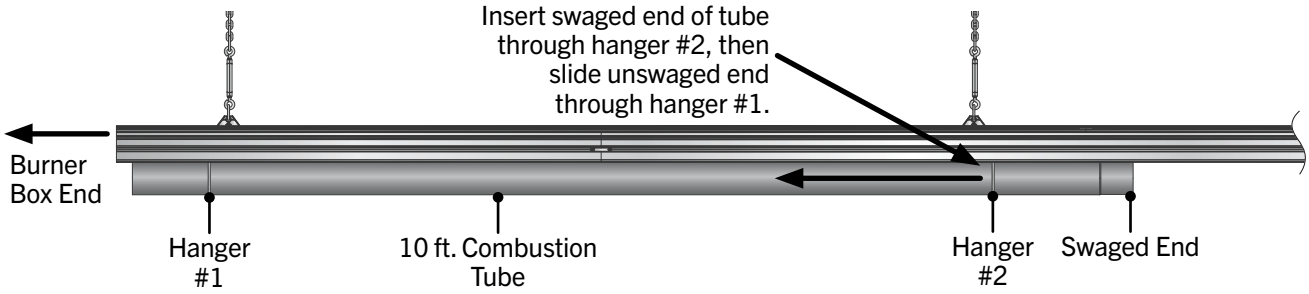

❽ Repeat Step 7 with remaining tubes, ensuring to place loosened tube clamp over swaged end of existing tube before fitting tubes together. **NOTE:** If the tube clamp comes apart, the spacer **must** be re-assembled with the spacer's concave surface facing against the radiant tube surface. Center tube clamps over the seam where two radiant tube sections connect (see Figure 3.9).

❾ Tighten tube clamp bolts to secure. When proper compression is obtained (40–60 ft.-lbs. torque) the tube seam will create a visible mark on the tube clamp (see Figure 3.9). **NOTE:** Excessive torque may damage the tube clamp.

Figure 3.9 • Tube Connections

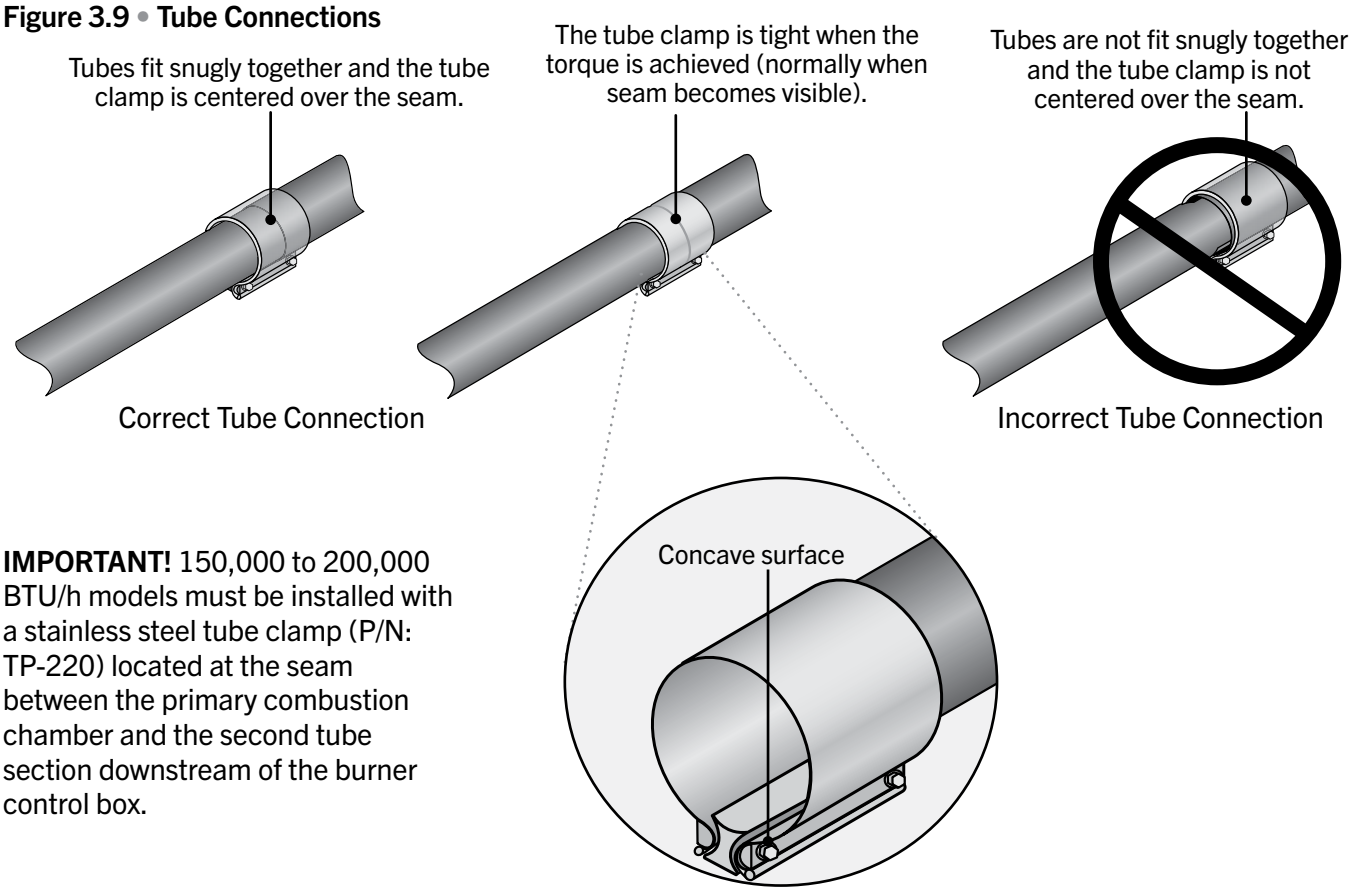

IMPORTANT! 150,000 to 200,000 BTU/h models must be installed with a stainless steel tube clamp (P/N: TP-220) located at the seam between the primary combustion chamber and the second tube section downstream of the burner control box.

Winglet and End Cap Installation

FOR ULTRA-WIDE, SINGLE PASS CONFIGURATIONS:

❶ Slide winglets into appropriate reflector wing groove (refer to Figure 3.10). Secure with winglet bracket as shown in Figure 3.11.

Figure 3.10 • Winglet End View

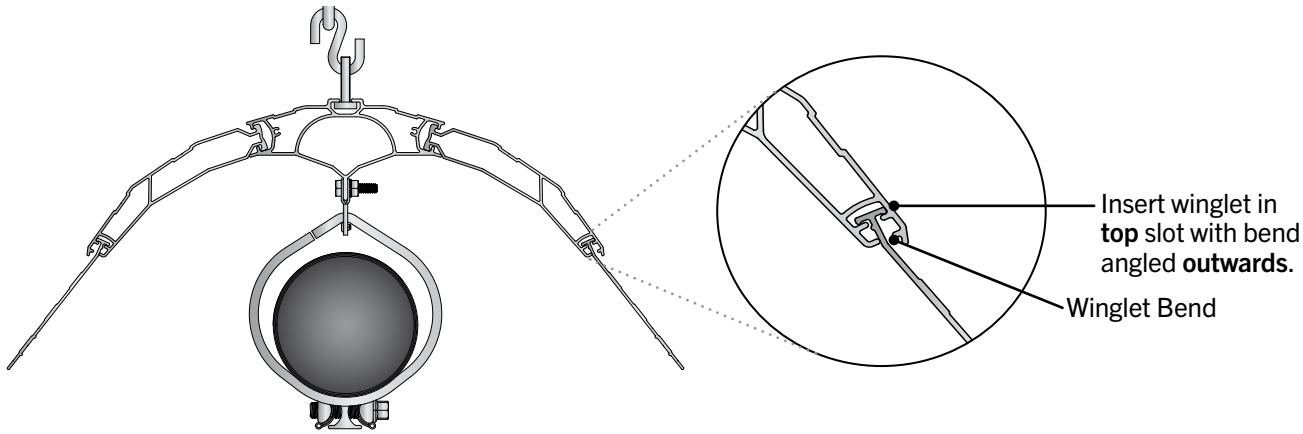

Figure 3.11 • Winglet Installation

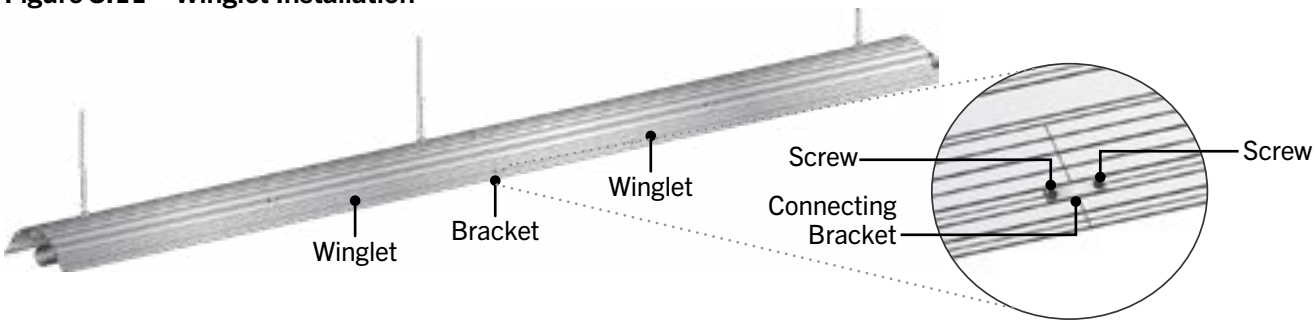

❷ Secure exhaust end reflector end cap using six (6) #8 self-drilling screws in locations indicated by arrows in Figure 3.12.

Figure 3.12 • Ultra-Wide, Single Pass Configuration End Cap

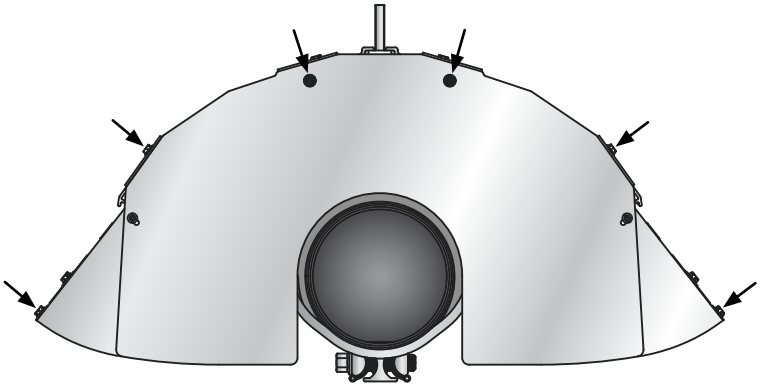

FOR WIDE, DUAL PASS CONFIGURATIONS:

❶ Slide winglets into appropriate reflector wing groove (refer to Figure 3.13). Secure with winglet bracket as shown in Figure 3.14.

Figure 3.13 • Winglet End View

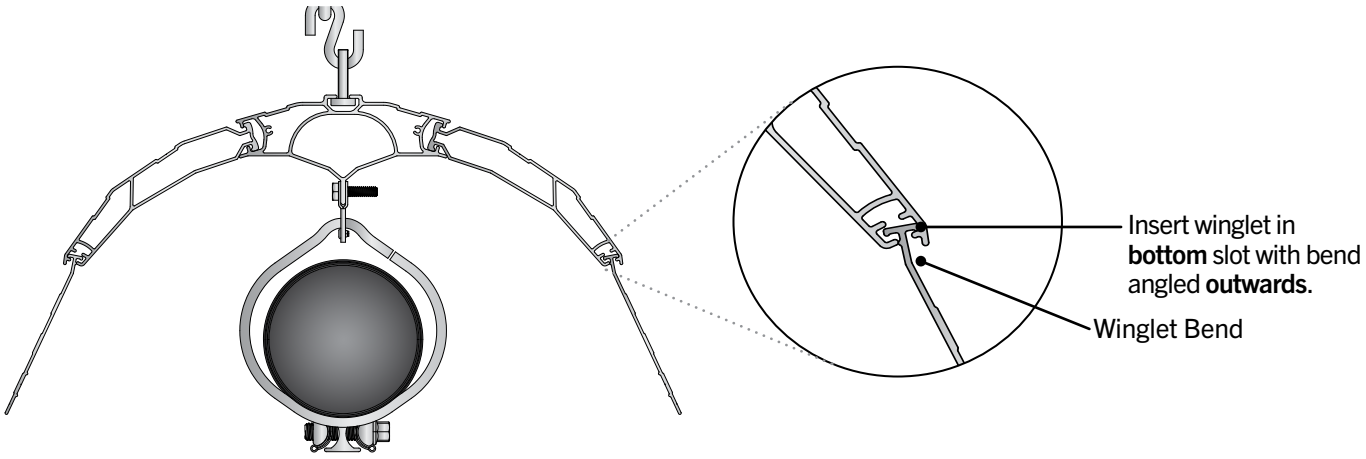

Figure 3.14 • Winglet Installation

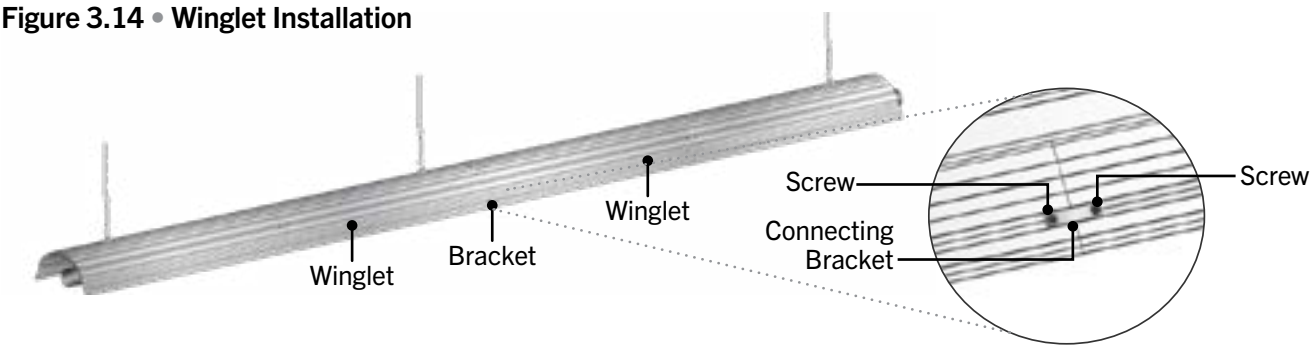

❷ Secure exhaust end reflector end cap using six (6) #8 self-drilling screws in locations indicated by arrows in Figure 3.15.

Figure 3.15 • Wide, Dual Pass Configuration End Cap

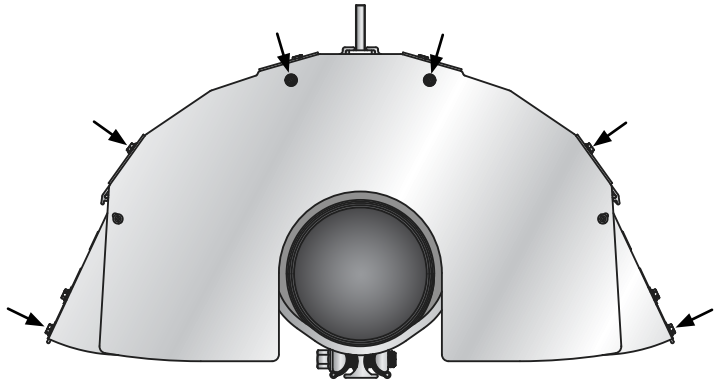

FOR NEUTRAL, DUAL PASS CONFIGURATIONS:

❶ Slide winglets into appropriate reflector wing groove (refer to Figure 3.16). Secure with winglet bracket as shown in Figure 3.17.

Figure 3.16 • Winglet End View

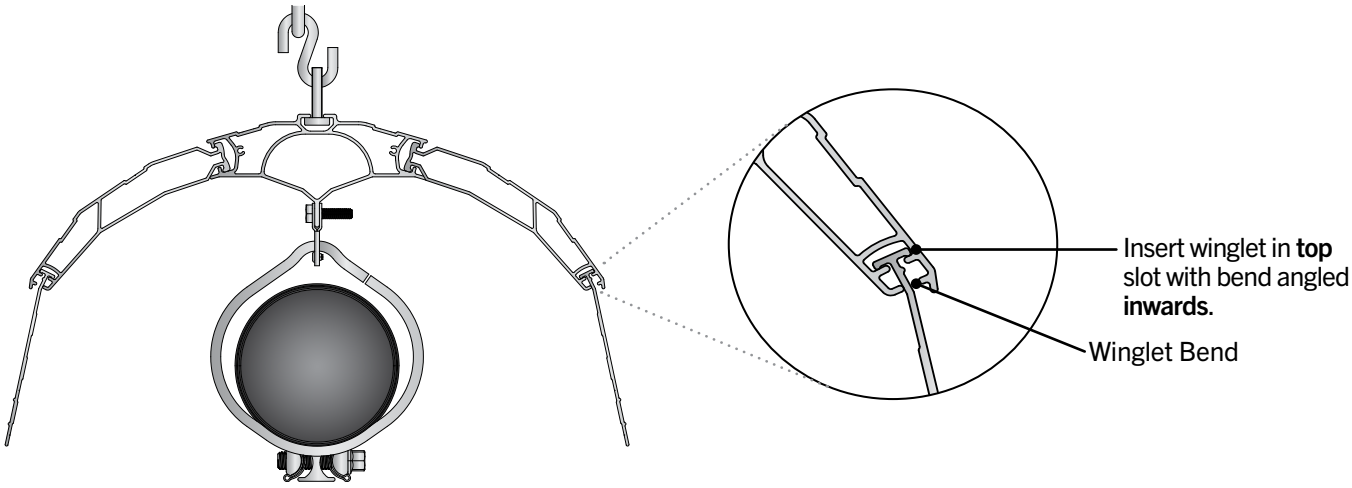

Figure 3.17 • Winglet Installation

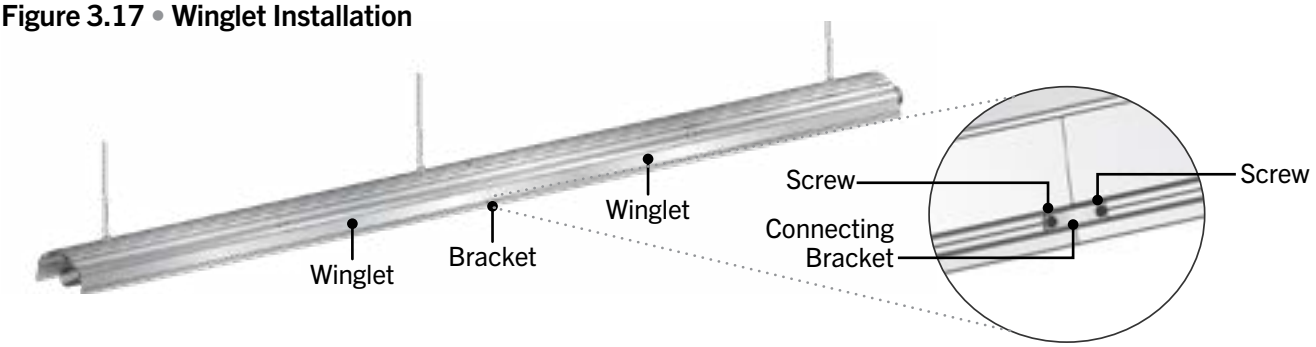

❷ Secure exhaust end reflector end cap using six (6) #8 self-drilling screws as shown in Figure 3.18.

Figure 3.18 • Neutral Dual Pass Configuration End Cap

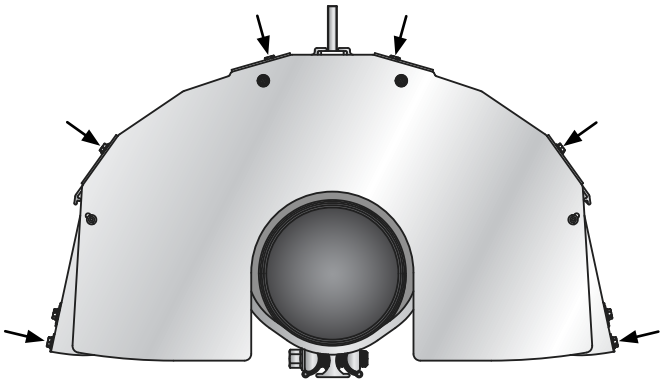

FOR NARROW, DUAL PASS CONFIGURATIONS:

❶ Slide winglets into appropriate reflector wing groove (refer to Figure 3.19). Secure with winglet bracket as shown in Figure 3.20.

Figure 3.19 • Winglet End View

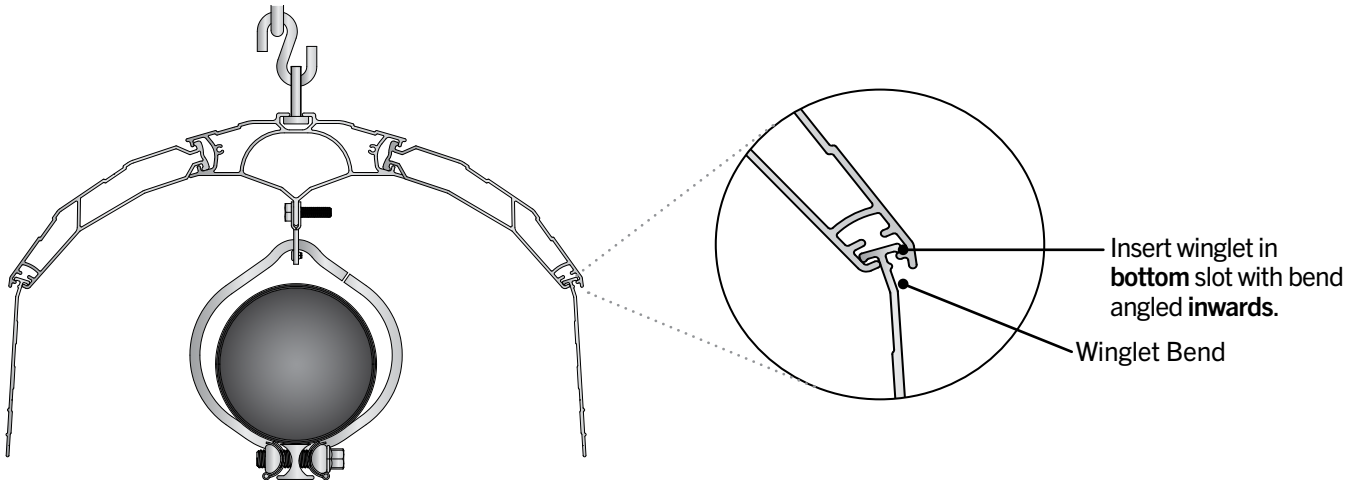

Figure 3.20 • Winglet Installation

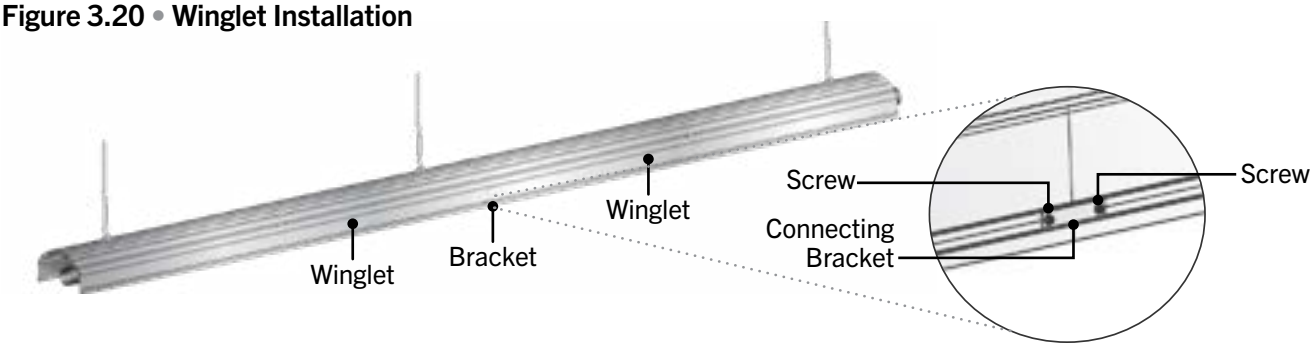

❷ Secure exhaust end reflector end cap using six (6) #8 self-drilling screws as shown in Figure 3.21.

Figure 3.21 • Narrow, Dual Pass Configuration End Cap

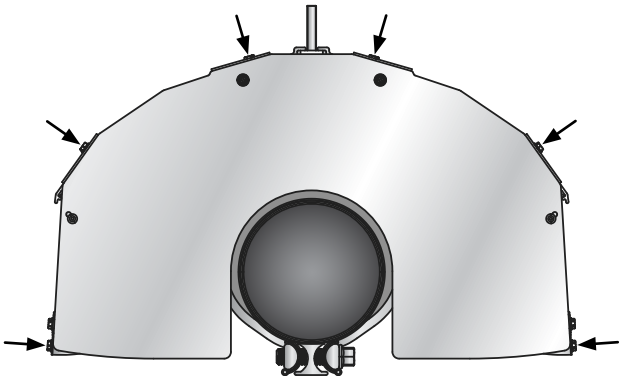

FOR OPEN THROW/35° CONFIGURATIONS:

❶ Determine which side of heater to install winglets. On the ground, connect two winglets together by overlapping and securing with five (5) evenly spaced #8 self-drilling screws (see Figure 3.22). **NOTE:** It may be necessary to drill pilot holes before inserting screws. Repeat for each 10 ft. heater section.

❷ Slide winglets into appropriate reflector wing groove (refer to Figure 3.23). Secure 10 ft. winglet sections together with #8 self-drilling screws and connection brackets as shown in Figure 3.24.

Figure 3.22 • Winglet Assembly

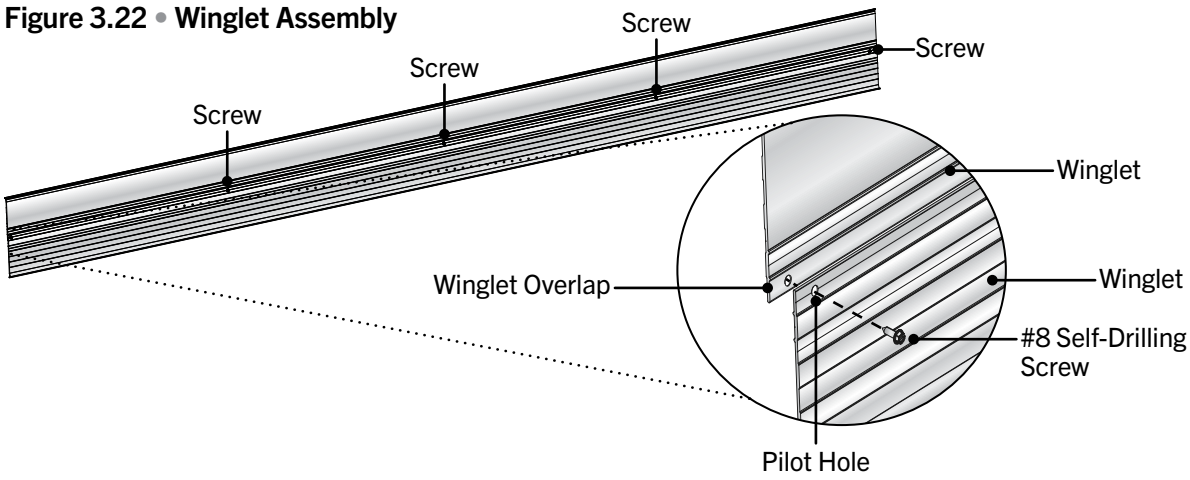

Figure 3.23 • Open Throw/35° Configuration End View

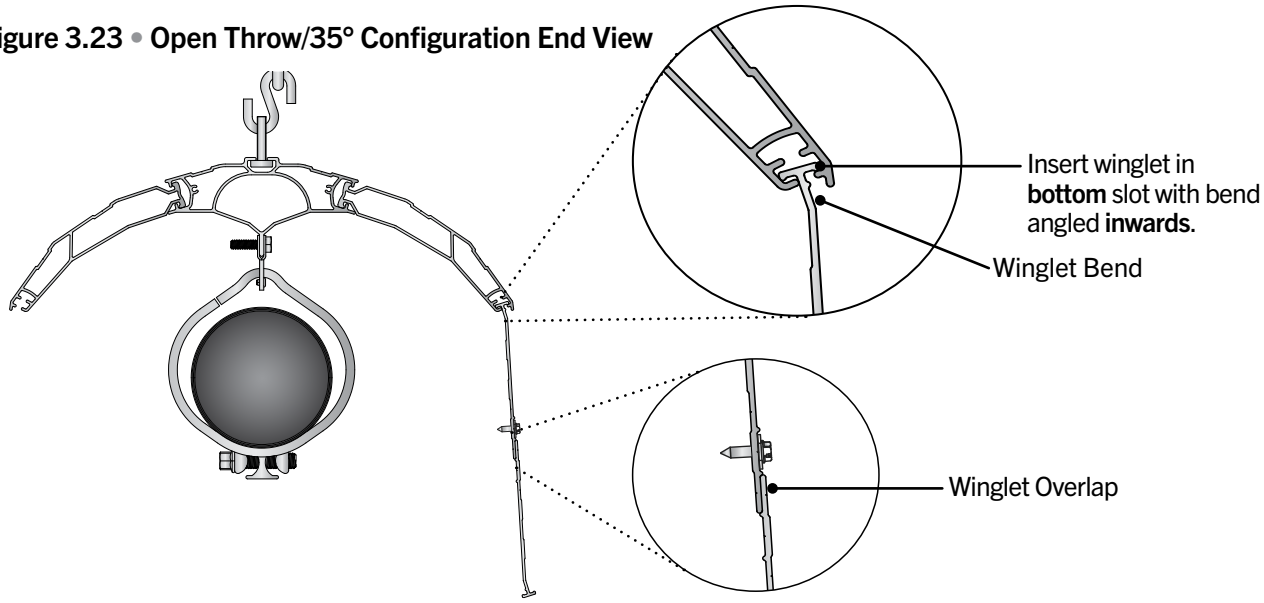

Figure 3.24 • Winglet Installation

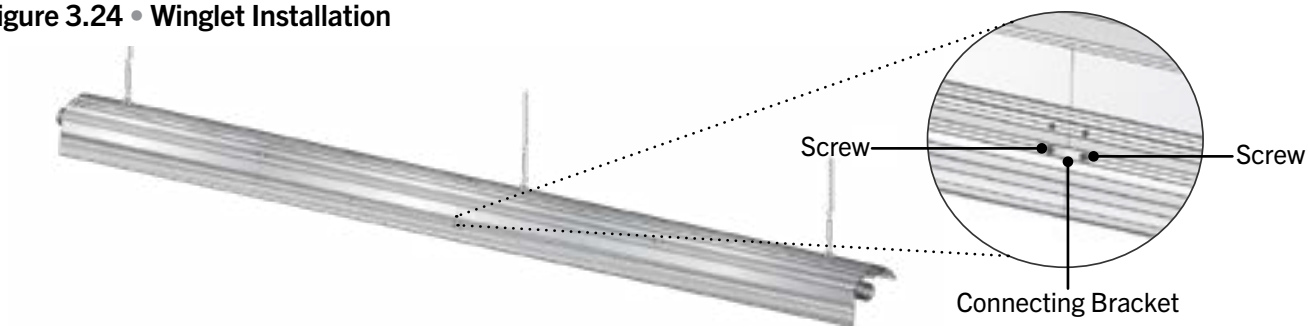

❸ Secure exhaust end reflector end cap using six (6) #8 self-drilling screws as shown in Figure 3.25.

Figure 3.25 • Open Throw/35° Configuration End Cap

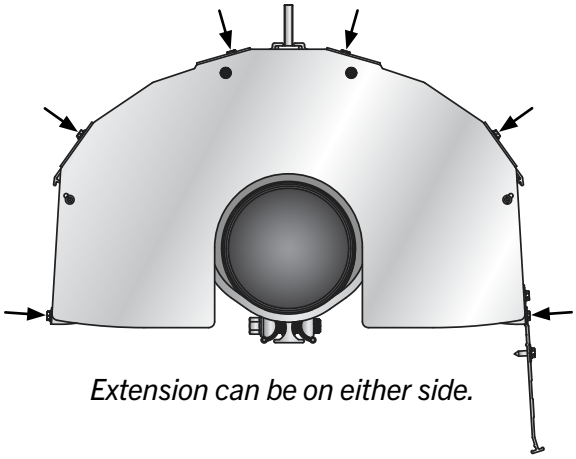

Burner Control Box Suspension

Suspending the burner control box must be done in accordance with applicable codes listed in the Safety section and these instructions.

The burner control box must be in straight alignment with all radiant tubes and level. Contact your local distributor or the factory to see if your application allows for the rotation of the burner control box.

1. Determine the mounting chain locations for hanging the burner control box. **NOTE:** The desired suspension material shall have a minimum workload rating of 310 lbs.
2. Fasten beam clamp, screw hook or other type of suspension anchor to hanging point.
3. Attach S-hook and #1 double loop chain (P/N: THCS-REV) to anchor. Check that it is securely connected.
4. Attach chain assemblies and S-hooks to mounting brackets on the burner control box. Adjust chain lengths until level and in straight alignment with radiant tubes. Burner sight glass will be visible from the floor.
5. Position burner so that there is a 1” gap between the electrode compartment and end cap.
6. Secure tube clamp as described on page 18.
7. Connect pre-heated air hose to barbs on burner box and end cap.

Figure 3.26 • **Burner Control Box Assembly** - Side View

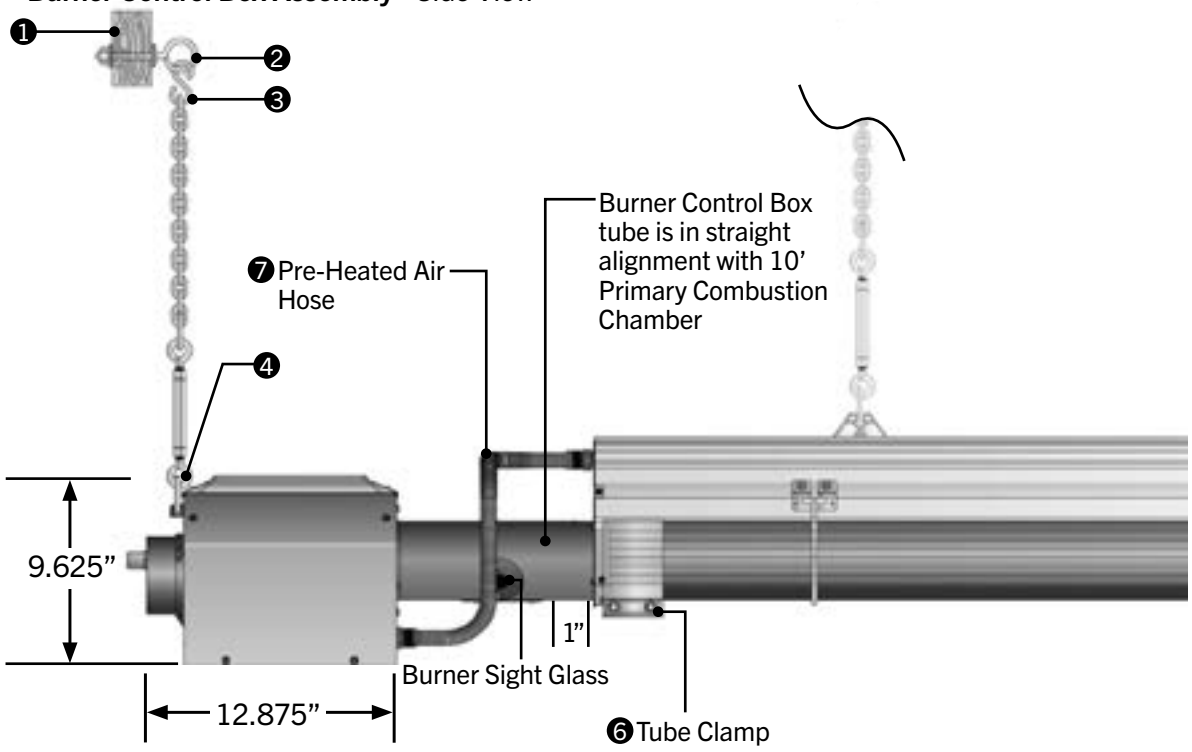

Required Safety Bracing

REV Series heaters include a safety bracing kit. Each 10 ft. section of tube and reflector requires safety bracing (except where sway bracing is used instead—refer to page 27). To connect safety bracing:

❶ Screw eyelets into reflector nutserts.

❷ Extend Gripple® cables to appropriate length and attach to hanging chain with included S-hook as shown in Figure 27. Crimp S-hook to secure.

❸ Repeat for each additional suspension point except for the suspension point nearest to burner box, as shown in Figure 27.

Figure 3.27 • Heater with Safety Bracing

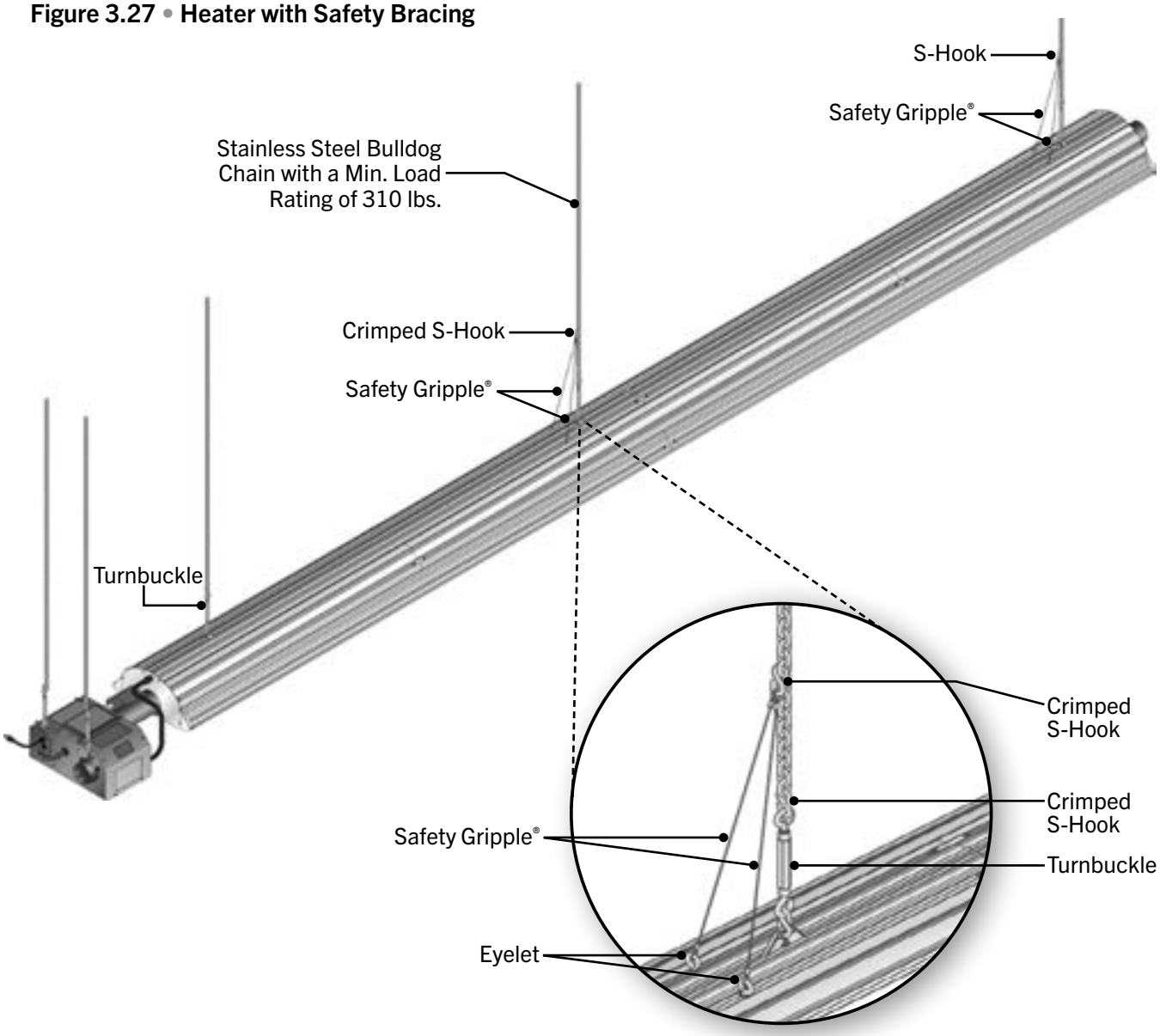

Sway Bracing for High Air Movement and Outdoor Applications

For high air movement and outdoor applications, install side restraints (field supplied) to modified safety bracing to reduce side to side swaying (see Figure 3.28). Side restraints should be installed so that they are angled at 45° ± 10° and should be placed at every designated suspension point. It may be necessary to add additional support structures at the ceiling level for the connection of these side suspensions. Apply longitudinal (forward/backward) bracing (P/N: THGH10-3 or field supplied) at each end of the heater. The desired suspension material shall have a minimum work load rating of 310 pounds.

Figure 3.28 • Heater with Sway Bracing

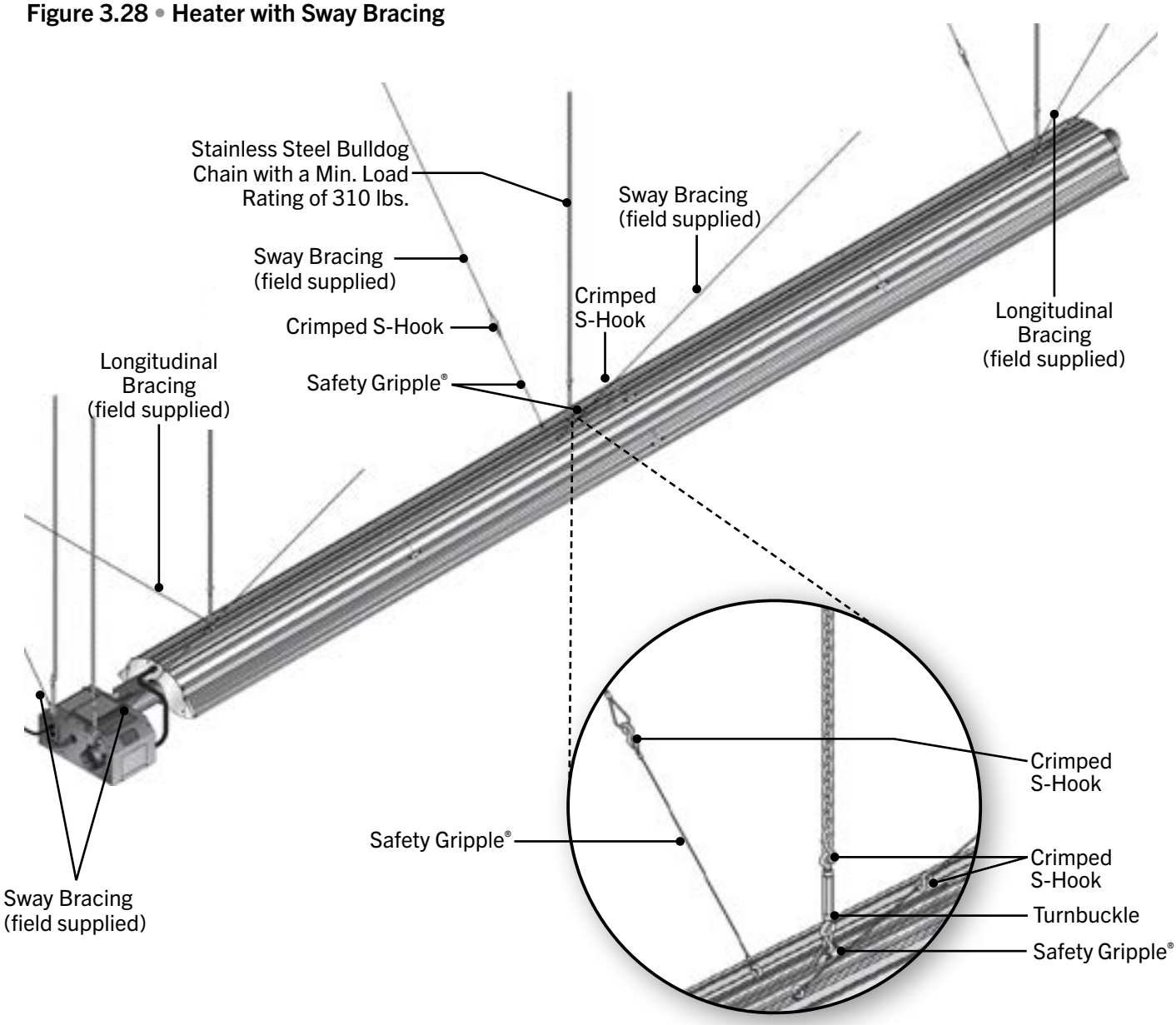

Baffle Assembly and Placement

Different models and inputs utilize specific baffle lengths. Remove all enclosed baffle sections from box and retain with applicable heater. Reference shipping label for proper baffle size.

To assemble the baffles: (**NOTE:** Baffles may be inserted into the tube while being assembled.)

1. Determine the number of baffles needed for your model number (refer to Chart 1.1 on page 3).
2. Orient the baffle tabs at a 90° angle to the baffle keyhole (see Figure 3.29).
3. Insert one baffle tab into keyhole and slide completely to one side until both baffle tabs appear in the keyhole.
4. Adjust the tabs to the center of the keyhole and rotate the baffle 90° to lock the baffle sections together.
5. Repeat this process with all remaining baffle sections to complete assembly.

Figure 3.29 • Assembling the Baffles

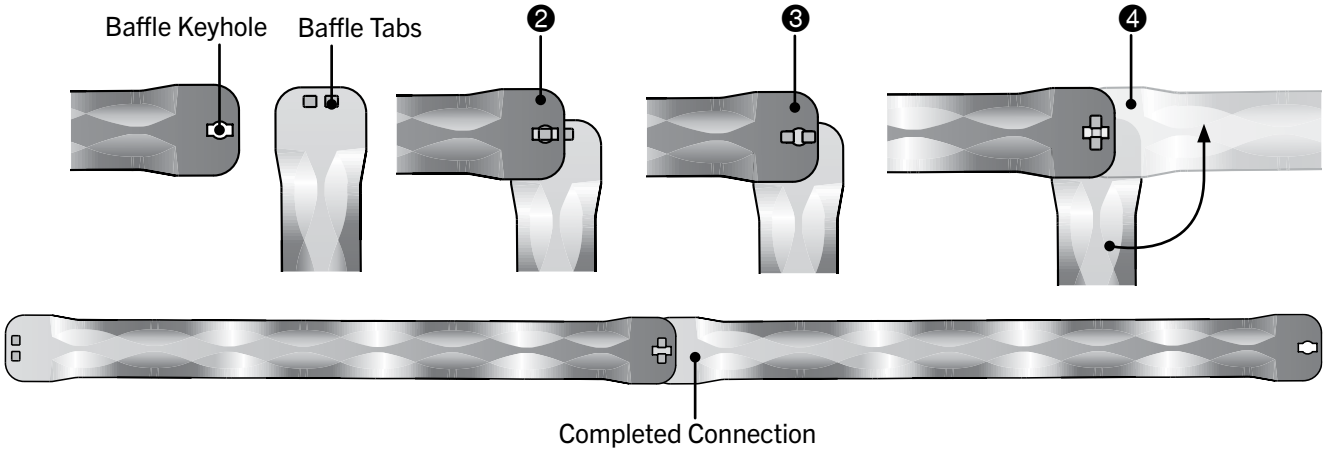

To insert the baffles:

1. Insert baffles with the keyhole end first.
2. Rotate baffle assembly so that it is in the **vertical position**.
3. Slide baffle assembly into the last radiant tube section, furthest from the burner control box.
   NOTE: Baffle assemblies longer than 10 feet will continue to be fed into next tube section.

Figure 3.30 • Inserting the Baffles

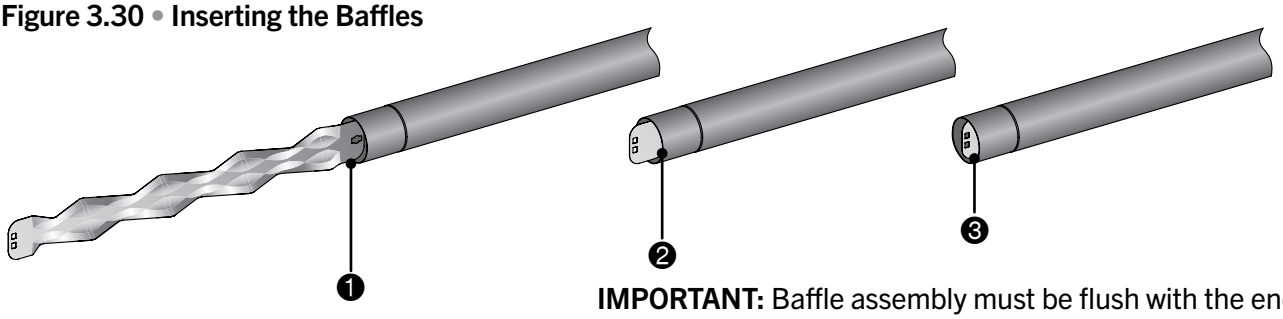

IMPORTANT: Baffle assembly must be flush with the end of the last tube section and in the vertical position.

Final Heater Assembly

Chart 3.3 • Tube Installation Sequence and Baffle Location

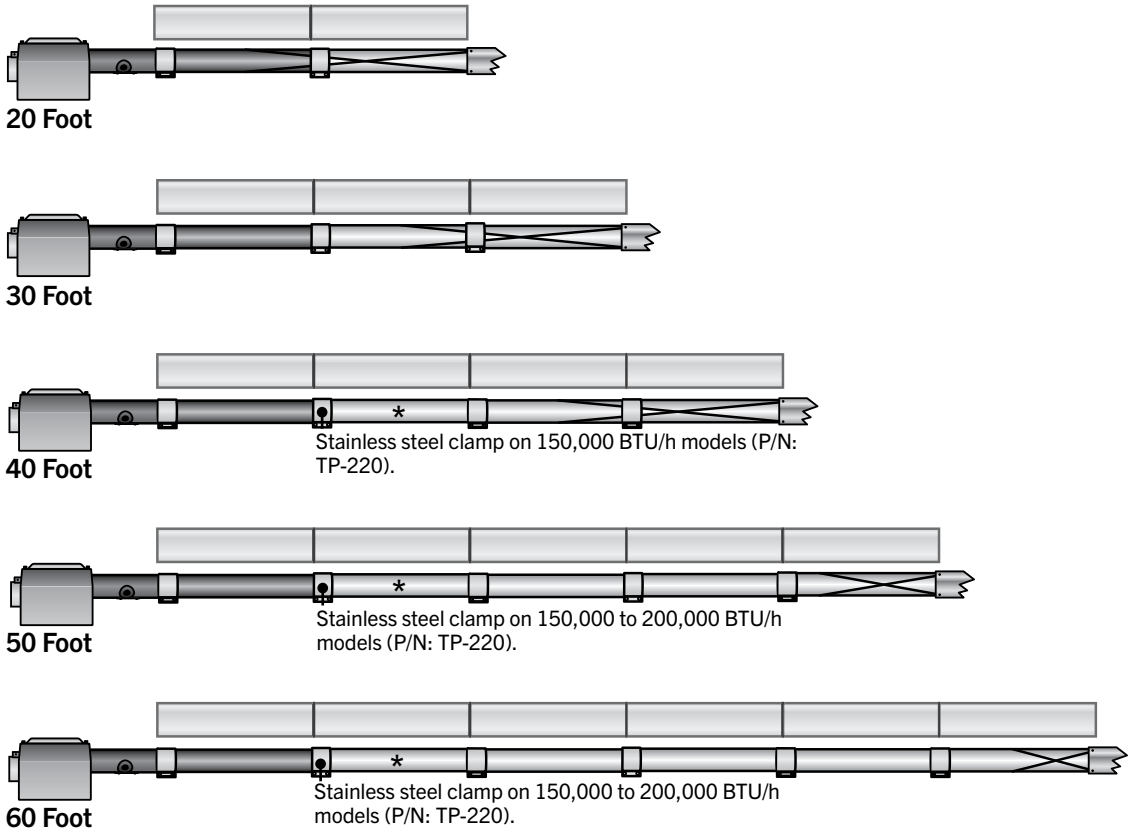

Key

	Burner Control Box w/16 in. Burner Tube		Radiant Tube Exchanger with Clamp
			Baffle Location (Refer to Series Manual for baffle quantity.)
	Primary Combustion Chamber with Clamp		Secure vent material to exchanger with three #8 sheet metal screws. Seal with high temperature silicone sealant. Do not use tube clamp.

Venting

The REV Series tube heater must be vented as described here to properly direct flue gases from the unit to the outside atmosphere. The venting can terminate vertically through the roof (up) or horizontally through a sidewall (sideways).

Follow these guidelines and all applicable codes for all models prior to installing the vent material. Local codes may vary.

In the absence of local codes:

United States: Refer to NFPA 54/ANSI Z223.1 (latest edition), National Fuel Gas Code.
Canada: Refer to CAN/CGA B149.1 and B149.2 Installation Codes for Gas Burning Appliances.

⚠ WARNING

Gas-fired heaters must be vented. A built in power exhauster is provided. Additional external power exhausters are not required or permitted.

Insufficient ventilation and/or improperly sealed vents may release gas into the building which could result in health problems, carbon monoxide poisoning, or death. Improper venting may result in fire, explosion, injury, or death.

⚠ WARNING

Do not vent this appliance into another heater's vents or through a masonry chimney.

Do not use dampers in the heater vent pipe.

Single wall vent pipe must not pass through any unoccupied attic, inside wall, concealed space, or floor.

Un-insulated single wall vent pipe must not be used outdoors for venting appliances in regions where winter design temperature is below freezing.

Replacing Existing Equipment

If the heater is replacing existing equipment and using an existing vent system, inspect the venting for proper size and horizontal pitch as directed in these instructions and the latest edition of the National Fuel Gas Code, ANSI Z223.1 (NFPA 54) or CSA B149.1 Installation Code. When an existing Category I heater is removed or replaced, the original venting system may no longer be sized to properly vent the attached appliances.

Determine that there is no blockage or restriction, leakage, corrosion, or other deficiencies that can cause hazards. The vent pipe should be corrosion-resistant galvanized steel of a thickness that meets the National Fuel Gas Code. Minimum thickness for connectors varies depending on the pipe diameter. Never vent the REV Series with PVC or plastic pipe.

⚠ WARNING

If replacing an existing heater, vents may require re-sizing. Improperly sized venting systems can result in vent gas leakage or condensation. Refer to the National Fuel Gas Code ANSI Z223.1 (NFPA 54) or CSA B149.1 - latest edition. Failure to follow these instructions can result in serious injury or death.

General Venting Requirements

The venting system for REV Series heaters may terminate horizontally through a sidewall or vertically through the roof, and may be individually or commonly vented. Configuration of the vent termination determines the category type. All model heaters must be installed in accordance with the requirements of this section, as well as the requirements of its category determination, as described in this manual. To determine your applications category type, review "Vertical Venting (Category I)" and "Horizontal Venting (Category III)" sections of this manual.

All REV Series Model Requirements:

- Exhaust vent pipe must be 4 inch nominal size.
- Use vent pipe material that is corrosion-resistant galvanized steel of a thickness that meets the National Fuel Gas Code.
- Do not exceed a maximum vent length of 20 ft. with two elbows, 25 ft. with one elbow, or 30 ft. with no elbows.
- Maintain a minimum vent length of 3 feet.
- Maintain a minimum of 12 inches of straight pipe from the flue outlet before any directional changes are made in the venting system.
- Have all vent pipe seams or connectors sealed with high temperature silicone sealant approved for at least 550°F (field supplied) and fastened together with at least three (3) corrosion resistant sheet metal screws (field supplied).
- Maintain a 6 inch clearance around all single wall vent pipe from any combustible materials. For double-wall type B vent or Duravent PVP venting, follow the vent manufacturer's clearances to combustibles.
- The equivalent length for a 4 inch 90° elbow is 5 feet.
- Avoid using more than two 90° directional changes in the venting system.
- Suspend and secure all horizontal runs in a manner consistent with local codes and in such a way that the vent system is supported to prevent sagging.
- Vent termination must maintain a minimum distance of 6 feet from any mechanical air supply inlet.
- The vent terminal must be installed to prevent any blockage by snow and protect building material from degradation by flue gases.
- Consult NFPA ANSI Z223.1 Gas Vent Termination criteria for vents that terminate on a roof pitch that exceeds 9:12.
- **Canada:** Vents must terminate a minimum of 3 feet from a window or door that may be opened, and a non-mechanical air supply inlet or combustion air inlet into the building.

When possible, avoid venting through an unconditioned space. Venting through an unconditioned space promotes condensation. When venting through an unconditioned space is unavoidable, or if the unit is installed in an area that is prone to condensation, insulate venting runs greater than 5 feet to minimize the production of condensation. Inspect for leakage prior to insulating the venting and only use insulation that is non-combustible with a temperature rating of not less than 550°F. Install a tee fitting at the low point of the vent system and provide a drip leg with a clean out cap as shown in Figure 3.31.

When venting pipe passes through a combustible interior wall or floor, a metal thimble with a diameter 4 inches greater than the vent pipe diameter must be used. If there is 6 feet or more of vent pipe prior to passing through the combustible wall or floor, then the metal thimble need only be 2 inches greater than the vent pipe diameter. If a metal thimble is not used, all clearances to combustibles from the vent pipe must be 6 inches. When permitted, type B vent or Duravent PVP venting may be used for the last section of vent pipe to reduce the required clearances to combustibles when passing through a combustible wall or floor. When using type B vent or Duravent PVP venting, follow the manufacturer's recommended clearances to combustibles. Any material used to close or insulate the opening must be non-combustible.

Vertical Venting (Category I)

An appliance that operates with a non-positive vent static pressure and with a vent gas temperature that avoids excessive condensate production in the vent is said to be 'Category I'. The REV Series heater is considered a Category I appliance if the venting system meets all of the following criteria:

- The vent system terminates vertically (up).
- The length of the horizontal portion of the vent run is less than 75% of the vertical rise length. (e.g.- If the vertical vent height is 10 feet, the horizontal run is less than 7 ½ feet).
- The vent terminates a minimum of 5 feet above the vent connection on the unit.
- Horizontal venting sections of the vent pipe must be installed with an upward slope from the appliance at a pitch of ¼ inch per foot.

For vertical vent termination, the venting must comply with all parts of this section, in addition to the requirements of the general venting.

Category I (Vertical) venting is venting at a non-positive pressure. An appliance vented as a Category I is considered a fan-assisted appliance and the vent system does not have to be 'gas tight'. It is recommended that the venting system is installed with a tee, drip leg, and clean-out cap as shown in Figure 3.31.

Vent Locations and Clearances:

- Separate air intake duct from vent pipe by a minimum of 4 feet by placing vent pipes higher than adjacent air intake ducts.
- Utilize a listed type B vent termination cap.
- The vent terminal must extend a minimum of 2 feet above the roof.
- Vent caps should be located a minimum of 2 feet away from adjoining structures.

All vertically vented heaters that are Category I must be connected to a chimney or vent complying with a recognized standard, or lined masonry (or concrete) chimney with a material acceptable to the authority having jurisdiction. Venting into an unlined masonry chimney is not permitted. Refer to the National Fuel Gas Code and page 31 of this manual.

Use a listed vent terminal to reduce down drafts and moisture in the vent.

Figure 3.31 • Rooftop Venting - Side View

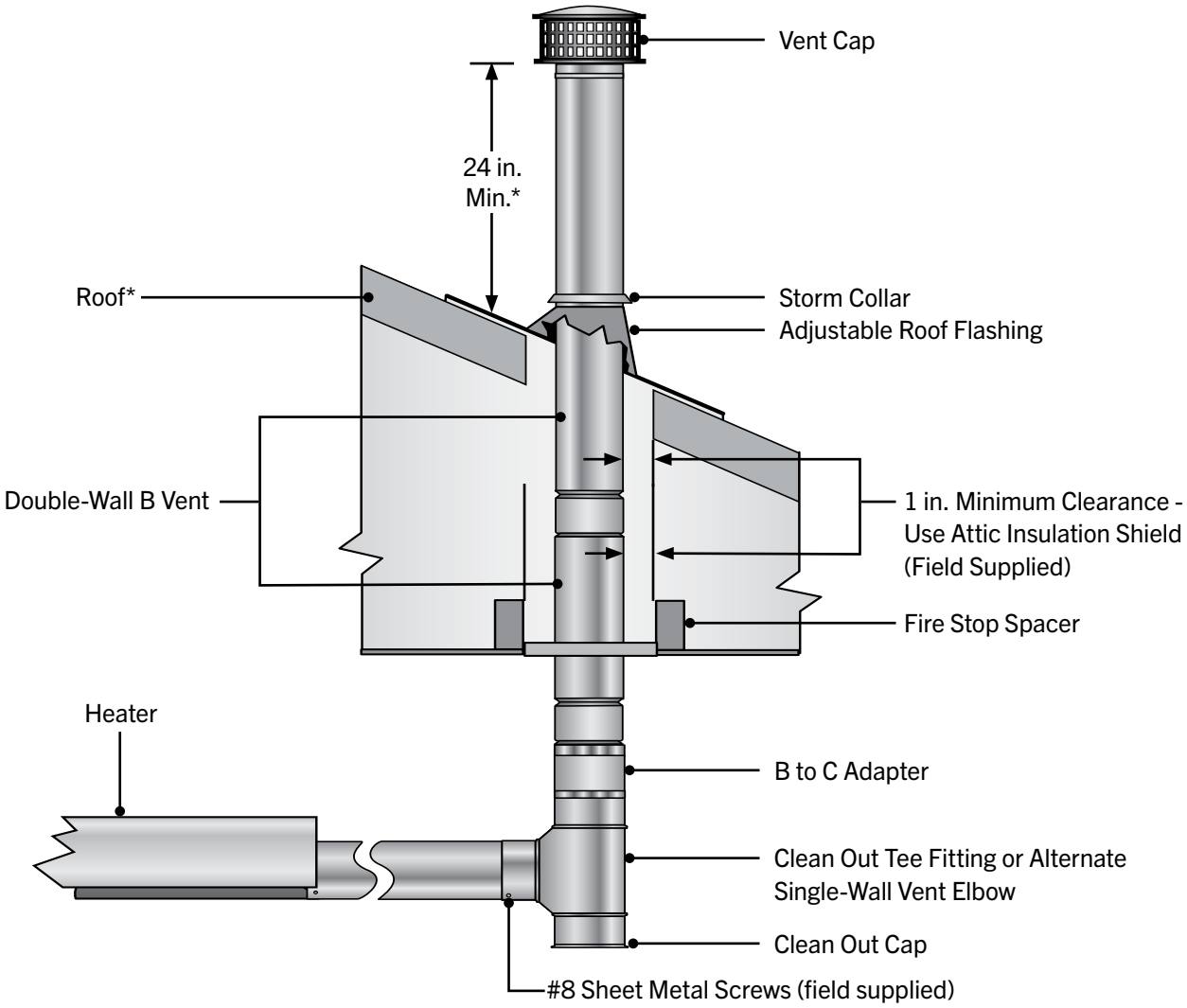

*Consult the NFPA ANSI Z223.1 Gas Vent Termination criteria if roof pitch exceeds 9:12

Horizontal Venting (Category III)

An appliance that operates with a positive vent static pressure and with a vent gas temperature that avoids excessive condensate production in the vent is said to be "Category III". The REV Series heater is considered a Category III appliance if the venting system meets all of the following criteria:

- The vent system terminates horizontally (sideways).
- The vent terminates vertically, but the length of the horizontal portion of the vent run exceeds 75% of the vertical rise length. (e.g. If the vertical vent height is 10 feet, the horizontal run is greater than 7 ½ feet).
- The vent terminates below 5 feet of the vent connection on the unit.
- Horizontal venting sections of the vent pipe must be installed with a downward slope from the appliance at a pitch of ¼ inch per foot.

Vent enclosed spaces and buildings according to the guidelines in this manual and applicable national, state, provincial, and local codes.

The venting system must be provided by the installer and should be comprised of single-wall venting materials with a thickness of no less than 26 gauge. All joints must be sealed with a high temperature silicone sealant approved for at least 550°F using a minimum bead of ¼" x ¼", and fastened with at least three corrosion resistant #8 sheet metal screws evenly spaced.

One continuous section of double-wall B vent or Duravent PVP vent may be used to pass through a combustible wall or barrier, or the installer may continue to use single-wall vent provided a combustible wall thimble is used which provides adequate clearances to combustibles.

All horizontal Category III vents must be terminated with a Simpson-Duravent sidewall vent cap (P/N: SWD-4 for 4" venting).

IMPORTANT! Once all silicone sealant has fully cured according to manufacturer's instructions, the installer must perform a leak test on the complete venting system. A solution of soap and water may be used to test the venting inside the occupied space. Once the installer has verified the venting system is completely sealed and free of leaks, the heater may be placed into operation.

Vent Locations and Clearances:

- Vent must terminate a minimum of 4 feet below, 4 feet horizontally from, or 1 foot above any window or door that may be opened or gravity air inlet into the building.
- Vent must terminate a minimum of 3 feet above any forced air inlet that is located within 10 feet.
- The bottom of the vent terminate must be located a minimum of 12 inches above grade level and must extend beyond any combustible overhang. Vents adjacent to public walkways must terminate a minimum of 7 feet above grade level.
- The vent cap must be a minimum of 6 inches from the sidewall of the building.
- Vent must be a minimum of 36 inches below or extend beyond any combustible overhang.

Never join two sections of double wall vent pipe within one horizontal vent system as it is impossible to verify that inner pipes are completely sealed.

Figure 3.32 • Sidewall Venting Requirements

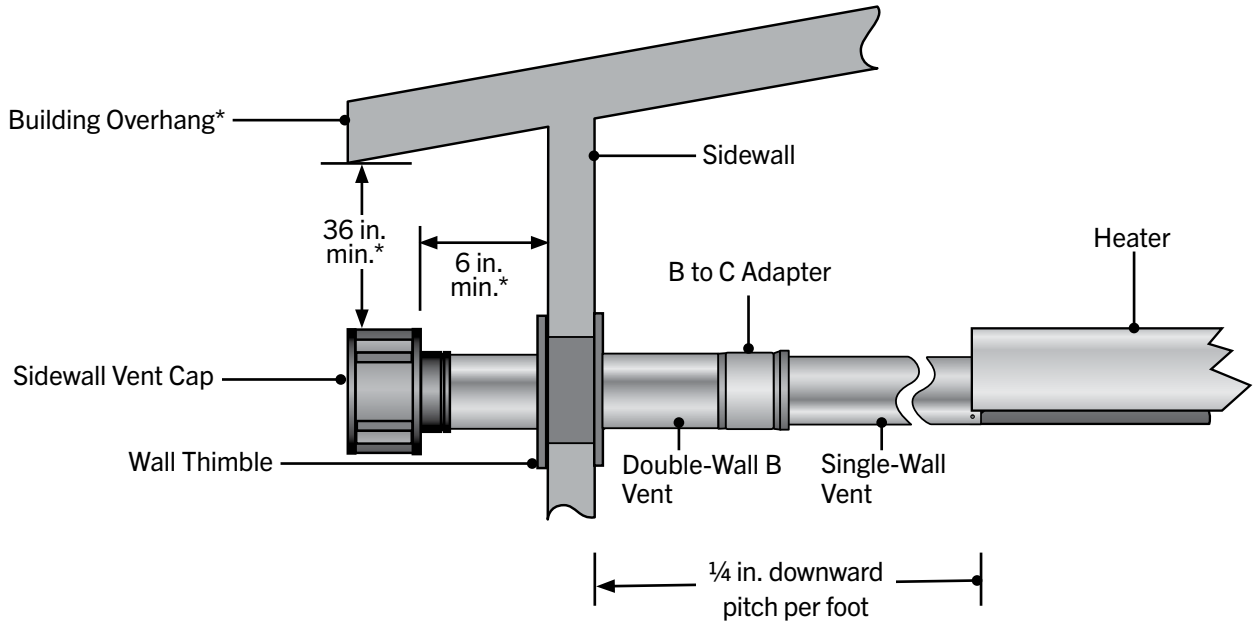

*Vent must extend beyond any combustible overhang if the vent is less than 36 in. below the combustible overhang.

Common Venting (Category I)

The common vent system and all attached appliances must be Category I and must be on the same control device.

The vent connector should be routed in the most direct route from the units to the common vent.

Where two or more vent connectors enter a common gas vent or chimney flue, the smaller connector shall enter at the highest level consistent with the available head room or clearance to combustible material.

Restrictions within the common vent such as elbows should be minimized. Each elbow installed within the common portion of the vent carrying system reduces the maximum common vent capacity by 10%. Refer to NFPA 54 for capacity.

The vent connector capacities allow for the use of two 90° directional changes. For each additional required elbow, the vent connector capacity is reduced by 10%.

The common vent cross sectional area must be equal to or greater than the largest vent connector cross sectional area.

Figure 3.33 • Common Rooftop Venting - Side View

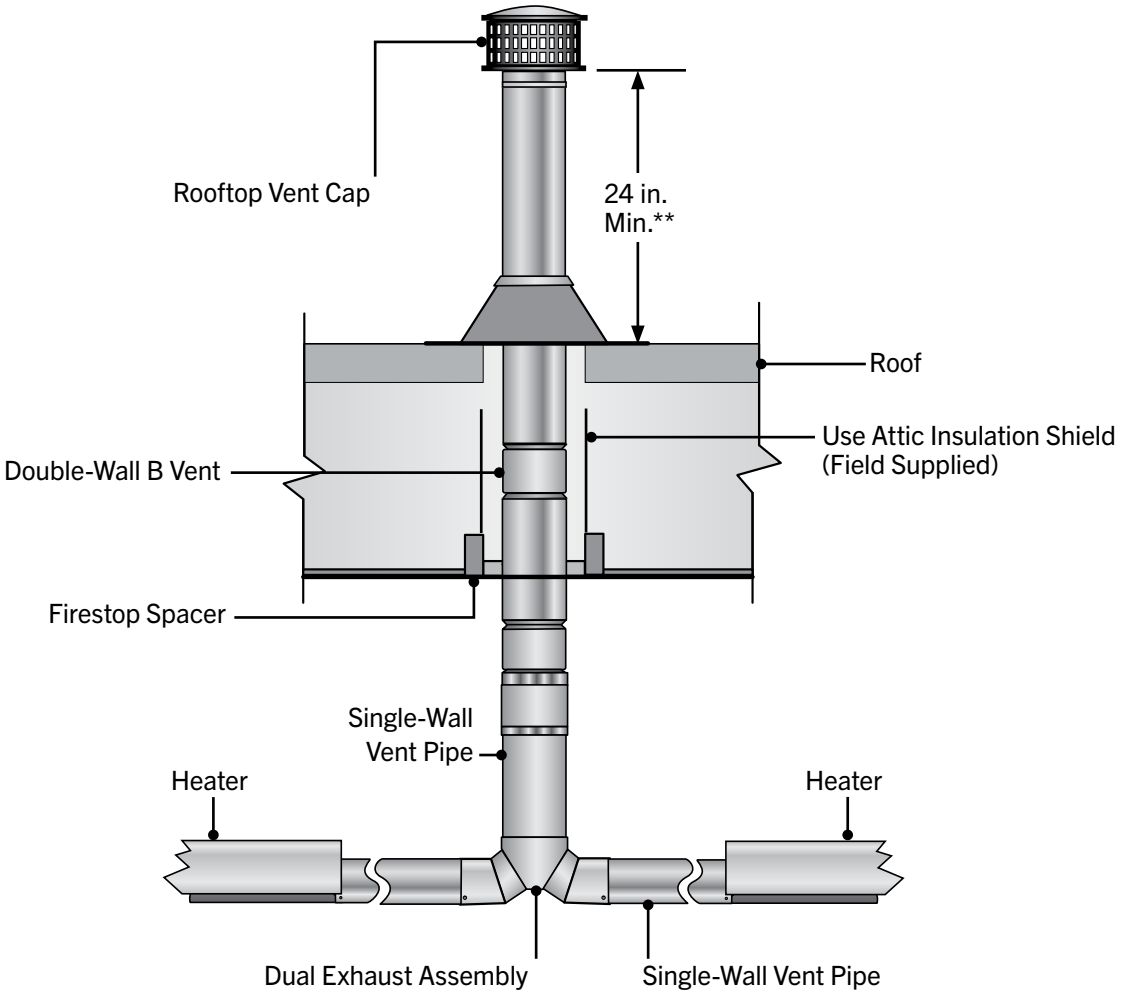

**Consult the NFPA ANSI Z223.1 Gas Vent Termination criteria if roof pitch exceeds 9:12.

Common Venting (Category III)

- A staggered arrangement or a dual exhaust assembly (P/N: Y) must be used when joining two heaters to a common vent so that by-products of one heater do not flow into the adjoining vent of the other heater.
- A Category III appliance may be common vented **only if** the appliances are on the same control device so that they may only be operated at the same time to prevent the backflow of exhaust gases into a non-operational appliance. The venting system must follow all guidelines for Category III venting as listed on pages 34–35.
- The vent connector should be routed in the most direct route from the units to the common vent.
- Where two or more vent connectors enter a common gas vent or chimney flue, the smaller connector shall enter at the highest level consistent with the available head room or clearance to combustible material.
- Restrictions within the common vent such as elbows should be minimized. Each elbow installed within the common portion of the vent carrying system reduces the maximum common vent capacity by 10%. Refer to NFPA 54 for capacity.
- The vent connector capacities allow for the use of two 90° directional changes. For each additional required elbow, the vent connector capacity is reduced by 10%.
- The common vent cross sectional area must be equal to or greater than the largest vent connector cross sectional area.

Figure 3.34 • Common Sidewall Venting - Top View

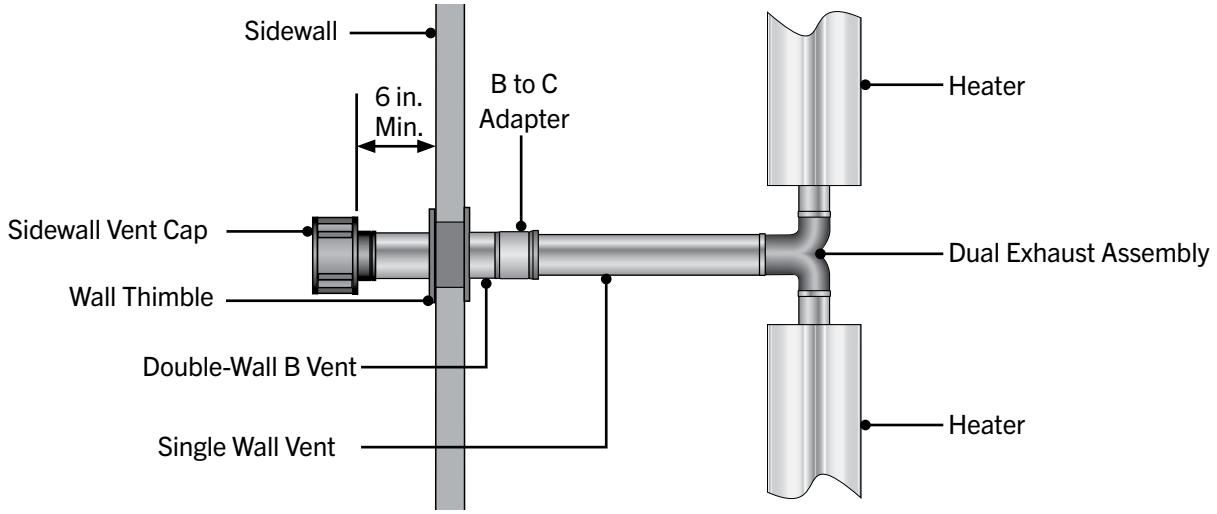

Optional Unvented Operation

⚠ WARNING

Not for residential use. The use of unvented tube heaters in residential indoor spaces may result in property damage, serious injury, or death. Use unvented operation in commercial and industrial installations with proper ventilation rates only.

When using an unvented configuration (commercial & industrial use only)**, consider the following:**

- A factory vent cap/diffuser (P/N: WVE-GALV) **must** be used.
- Where unvented heaters are used, natural or mechanical means **must** be provided to supply and exhaust a minimum of 4 CFM/1,000 BTU/h input of installed heaters.

  NOTE: Gravity or mechanical means may be used to accomplish the air displacement. Local codes may require that the mechanical exhaust system be interlocked with the electrical supply line to the heaters, enabling both to function simultaneously.
- The minimum clearance between the air intake and the exhaust terminal is 4 feet.
- Exhaust openings for removing the flue products must be located above the level of the heater(s).

Figure 3.35 • Minimum End Clearances

Combustion Air Requirements

Combustion air may be supplied to the heater by indoor or outdoor means. Follow these guidelines and all applicable codes for all models prior to installing the combustion air duct work. Local codes may vary. In the absence of local codes, refer and comply with the National Fuel Code ANSI Z223.1 (NFPA 54) latest edition or the National Standards of Canada.

⚠ WARNING

Sufficient combustion air must be supplied to the appliance at all times.
Lack of combustion air may result in property damage, serious injury, or death.

This unit comes standard equipped for connection of supplied outdoor air for combustion. It is designed for outside air to be brought into the appliance from combustion intake ducts, and is referred to as a "separated combustion" appliance.

This heater must operate as a separated combustion system if any of the following criteria apply:

- Chemicals such as chlorinated or fluorinated hydrocarbons (typical sources are refrigerants, solvents, adhesives, degreasers, paints, paint removers, lubricants, pesticides, etc.) are present in the atmosphere.
- High humidity.
- Contaminants such as sawdust, welding smoke, etc.
- Negative building pressure.
- Unusually tight construction where the air infiltration rate is less than 0.40 air changes per hour.

If your application does not meet any of these criteria, then room air may be used as supplying combustion air to the heater. Refer to 'Combustion Air Supply - Room Air' on page 41 for details on how to utilize room air for combustion.

Figure 3.36 • Vertical Outside Air Supply for Common Intake - Side View

NOTE: Common intake heaters must share the same thermostat.

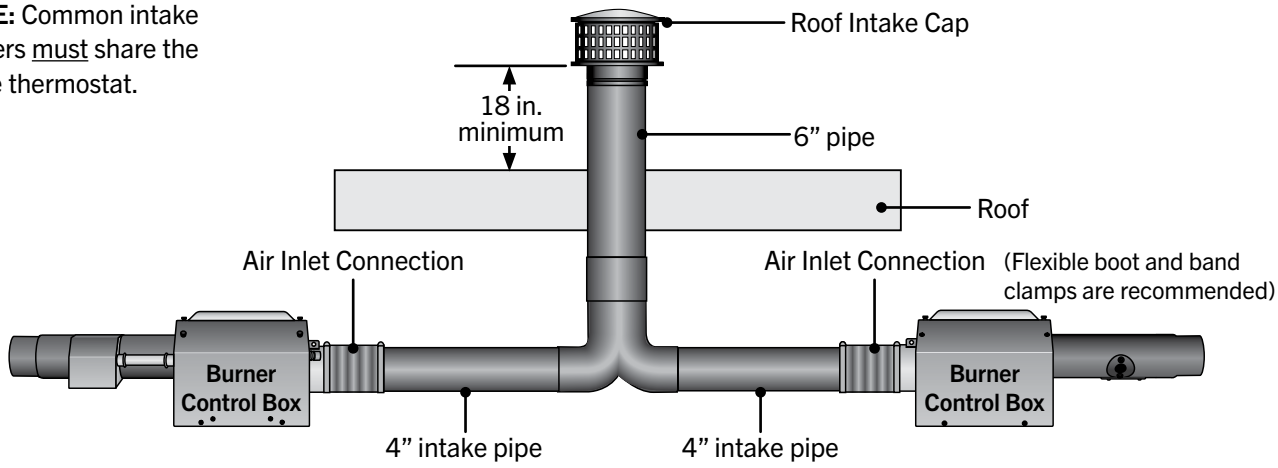

Separated Combustion Systems (Outside Combustion Air)

All REV series heaters come with a factory-installed combustion air adapter for attaching air intake ducts to the heater. Attach the air intake duct material to the adapter with three (3) non-corrosive sheet metal screws. If necessary, drill pilot holes prior to attaching the air intake ducts. The diameter of the intake ducts must not be smaller than the factory installed adapter.

When operating this unit as a separated combustion heater system, combustion air must be supplied to the heater by outdoor means through the factory installed vent connector. The combustion air intake duct may terminate horizontally through a sidewall or vertically through the roof. Ideally, the intake should terminate within the same pressure zone as the venting terminates, which should minimize the effects of wind.

All Separated Combustion systems must comply with the following items:

- Air intake ducts must be of galvanized steel or an equivalent corrosion-resistant material.
- Do not exceed a length of 20 feet.
- Do not exceed more than two (2) 90° directional changes (elbows) in the system.
- Seal all joints with metallic tape or silicone sealant. Wrap the tape two full turns around the vent pipe.
- Slope air intake pipe ¼ inch per foot upward or downward away from the unit.
- Do not draw air from attic space.
- Do not draw fresh air from the remaining space around a chimney liner, gas vent, special gas vent, or plastic piping installed within masonry, metal, or factory built chimney.
- Combustion air ducts may be insulated if they pass through an unconditioned space.
- A factory approved sidewall intake cap must be used when terminating the combustion air ducts horizontally through the sidewall.
- When combustion air ducts terminate vertically through the roof, a minimum of 18 inches above the roof grade must be maintained.
- Separate the air intake duct from vent pipe a minimum of 4 feet. Also, place vent pipe higher than adjacent air intake duct.
- Air intake duct must terminate a minimum of 3 feet below any forced air vent discharge that is located within 10 feet.
- The bottom of the air intake duct termination must be located a minimum of 12 inches above grade level. Air intake ducts that terminate adjacent to public walkways must be installed a minimum of 7 feet above grade level.
- The air intake duct must be installed to prevent blockage by snow, debris, or other possible obstructions.

Figure 3.37 • Outside Combustion Air Vertical Intake - Side View

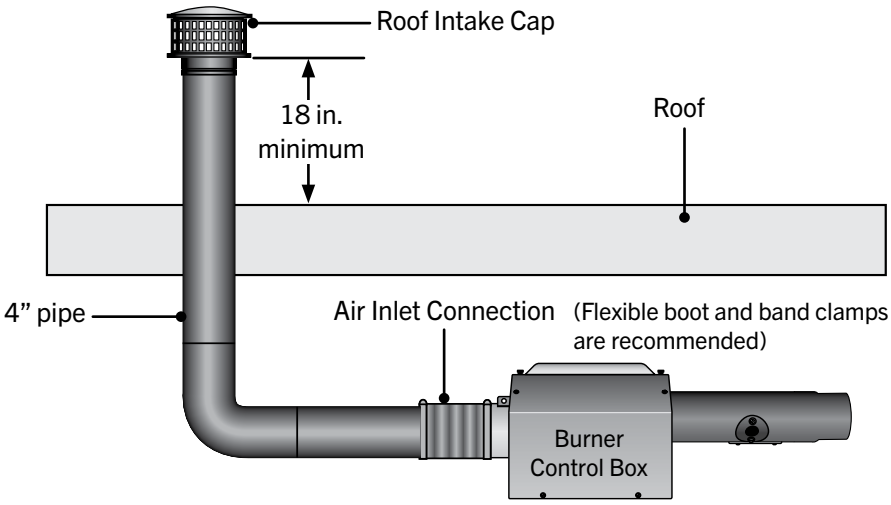

Figure 3.38 • Outside Combustion Air Sidewall Intake - Side View

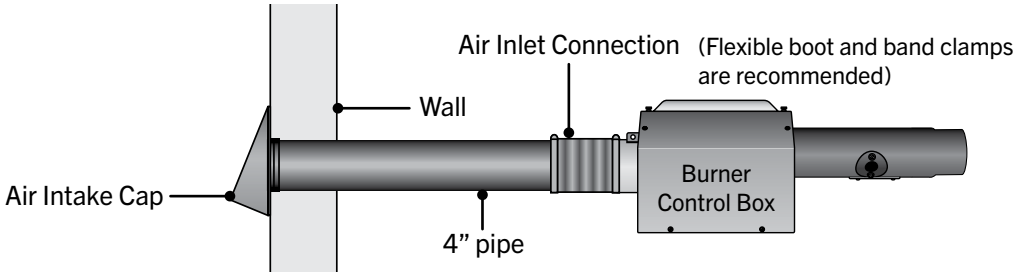

Combustion Air Supply - Room Air

Combustion air may be supplied to the heater by indoor or outdoor means.

If using combustion air from indoors, the required volume of the space must be a minimum of 50 ft^3 per 1,000 BTU/h unless the building is of unusually tight construction. If the building is of unusually tight construction with air infiltration rates of less than 0.40 air changes per hour, outside combustion air is typically needed unless the sheer size of the building allows otherwise. Contact the factory for further determination of air infiltration rates.

Non-contaminated outside air for combustion must be ducted to the heater if any of the following apply:

- Chemicals such as chlorinated or fluorinated hydrocarbons (typical sources are refrigerants, solvents, adhesives, degreasers, paints, paint removers, lubricants, pesticides, etc.) are present in the atmosphere.
- High humidity.
- Contaminants such as sawdust, welding smoke, etc.
- Negative building pressure.
- Unusually tight construction where there is an air infiltration rate of less than 0.40 per hour.

Guidelines:

Chart 3.4 • Limitations for Length and Size of Combustion Air Intake Duct

Single Heater Intake		Dual Heater Intake	
Air Intake Duct Size	Max. Intake Length	Duct Size	Max. Intake Length
4 in.	20 ft.	4 in. (single)/6 in. (dual)	20 ft.
5 in.	30 ft.	4 in. (single)/8 in. (dual)	30 ft.
6 in.	40 ft.	Consult factory for longer intake lengths.	

General

- No more than two 90° elbows are allowed.
- Allow for expansion. Use a 4 inch flexible hose to connect the duct to the burner control box.
- In humid environments, use insulated duct, PVC pipe, or DWV (drain waste vent) to prevent condensation on the outer surface.
- Do not draw air from attic space.
- A factory approved wall intake cap (P/N: WIV-4) must be used with horizontal outside intake ducts. The wall intake cap (P/N: WIV-4) must be installed to prevent blockage. Locate the intake where dirt, steam, snow, etc. will not contaminate or clog the intake screen.
- Separate air intake duct from vent pipe a minimum of 4 feet. Also, place vent pipe higher than adjacent air intake duct.

Gas Supply

The gas supply to the tube heater must be connected and tested in accordance with national, state, and local codes along with guidelines in this manual. In the United States refer to the latest edition of the ANSI Z223.1 (NFPA 54) Standard and in Canada refer to the latest edition of the CAN/CGA B149.1 Standard.

Supply gas piping to the unit should conform with the local and national requirements for type and volume of gas handled, and pressure drop allowed in the line. Avoid pipe sizes smaller than ½". The installation must conform with local building codes or, in the absence of such codes, the National Fuel Code (NFPA 54) and in conjunction with ANSI Z21.24/CSA 6.10 "Connectors for Gas Appliances".

⚠ WARNING

Improperly connected gas lines may result in serious injury and death, explosion, poisonous fumes, toxic gases, or asphyxiation. Connect gas lines in accordance with national, state, and local codes.

Gas pressure to the appliance controls must **never** exceed ½ PSI (14" W.C.). Damage to the controls may result.

⚠ CAUTION

Gas lines should be purged of air as described in ANSI Z223.1 (NFPA 54) or CSA-B149.1– latest edition. Installation of the piping must also conform to the local building codes or, in the absence of local codes, with the latest edition of the National Fuel Gas Code (NFPA 54). In Canada, installation must be in accordance with CSA-B149.1

NOTICE

The total input to the appliance must fall within +/- 5% of the rated input as indicated on the rating plate. Otherwise the heat exchanger may prematurely fail.

IMPORTANT! The heating system will expand and contract during operation. **Allowances for expansion must be made between the connection to the heater and the gas supply.** A flexible gas connection of approved type is required. Flexible stainless steel gas connectors installed in one plane, and without sharp bends, kinks, or twists is recommended.

IMPORTANT! Before connecting the gas supply to the burner control box:

- Verify that the heater's gas type (as listed on the rating plate) matches that of your application and the installation complies with national and local codes and requirements of the local gas company.
- Unless otherwise noted on the rating plate, this infrared heater is designed and orificed to operate on standard BTU gas. Contact the factory if utilizing non-standard BTU gas.
- Check that the gas piping and service has the capacity to handle the total gas consumption of all heaters being installed, as well as any other gas appliances being connected to the supply line.
- Check that the main gas supply line is of proper diameter to supply the required fuel pressures.
- If utilizing used pipe, verify that its condition is clean and comparable to a new pipe. Test all gas supply lines in accordance with local codes.

To connect the gas:

⚠ WARNING

Failure to install, operate, or service this appliance in the approved manner may result in property damage, injury, or death. Only trained, qualified gas installation and service personnel may install or service this equipment.

The REV Series heater is equipped to connect to the corrugated stainless steel tube flexible gas connector (Included). **Do not connect the main gas line directly to the heater's gas inlet without the use of the flexible connector.** All piping must be installed in accordance with the requirements outlined in the National Fuel Gas Code ANSI/Z223.1 (latest edition) or CSA-B149.1 and B149.2. Support all gas piping with pipe hangers, metal strapping, or other suitable material. Do not rely on the heater to support the gas pipe.

When connecting piping to the unit, the use of a thread joint compound is required. The thread compound (pipe dope) shall be resistant to the action of liquefied petroleum gas or any other chemical constituents of the gas to be conducted through piping. Use of Teflon® tape is not permitted.

Install ground joint union with a brass seat and a manual shut-off valve adjacent to the unit for emergency shut-off and easy servicing of controls. A ⅛" NPT plugged tap that is accessible for a test gauge connection is also recommended, as illustrated in Figures 3.39 and 3.40.

A sediment trap must be installed in the supply line in the lowest spot prior to connecting to the heater. The trap length shall be at least 3 inches long. Ideally, the trap would be installed as close as possible to the shut-off, as shown in Figure 3.40.

⚠ WARNING


Always use two (2) opposing wrenches to tighten mating pipe connections to prevent excessive torque on the gas valve and manifold pipe. Excessive torque can damage the valve and/or misalign the orifice resulting in fire, explosion, serious injury, or death.

Connect the main gas supply line with an approved flexible connector or, if the authority having jurisdiction requires rigid piping, the use of approved swing joints may be used. If swing joints are utilized, the heater must be allowed to freely expand and contract without causing undue stress on the gas pipe.

The heater shall not be connected to the building piping system with rigid pipe or semi-rigid metallic tubing, including copper. When using such material, an intermediate connection device that allows for the heater expansion must be used.

The gas outlet must be in the same room as the appliance is installed, and must be accessible. It may not be concealed within or run through any wall, floor or partition. When installing the heater in a corrosive environment (or near corrosive substances), use a gas connector suitable for the environment. Do not use the gas piping to electrically ground the heater.

Installation of the Gas Line to the Heater

❶ Install a sediment trap / drip leg in the supply line at the lowest spot prior to the gas ball valve. The trap length shall be at least 3 inches long. Ideally, the trap would be installed as close as possible to the shut off. **NOTE:** For high pressure gas above 14” W.C., a high pressure regulator and ball valve must be utilized and located upstream of the flex connector.

❷ Install manual shut off ball valve with optional ⅛” NPT Test connection towards the supply line. The manual shut off ball valve must be located within 6 feet of the appliance’s service access door.

❸ Install the ⅝” flare to ½” NPT adapter piece downstream of the gas valve as shown in Figure 3.39. This piece is typically included with the flexible gas connector, loosely installed on one of the flare nuts. **NOTE:** Keep flare surfaces clean and free of sealing compounds. Only the pipe threads require sealing compounds.

❹ Form the stainless steel flexible connector into a smooth C-shape, allowing approximately 12 inches between the flexible connector’s end nuts (see Figure 3.39). The connector must reach from the gas supply to the appliance without stretching, kinking, or twisting.

❺ Attach the flexible connector to the ⅝” flare adapter on the gas line and the other end to the ⅝” flare on the heaters inlet pipe. **DO NOT** connect the connector flare nuts directly to pipe threads. Use only the adapters provided. **DO NOT** kink, twist, or over-torque the connector when installing.

⚠ CAUTION

When using a stainless steel flexible gas connector, **do not** attach the connector nuts directly to the gas pipe supply. Connector nuts must be installed to an approved adapter.

Figure 3.39 • Gas Connection (Flexible Gas Connection shown) - Side View

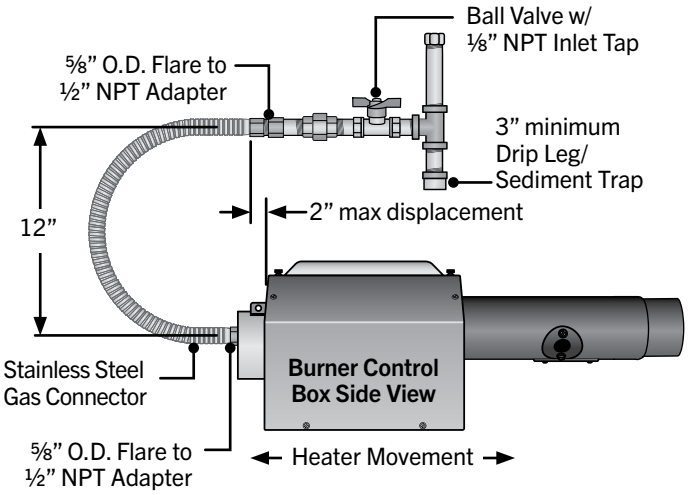

Figure 3.40 • Gas Connection (Flexible Gas Connection shown) - End View

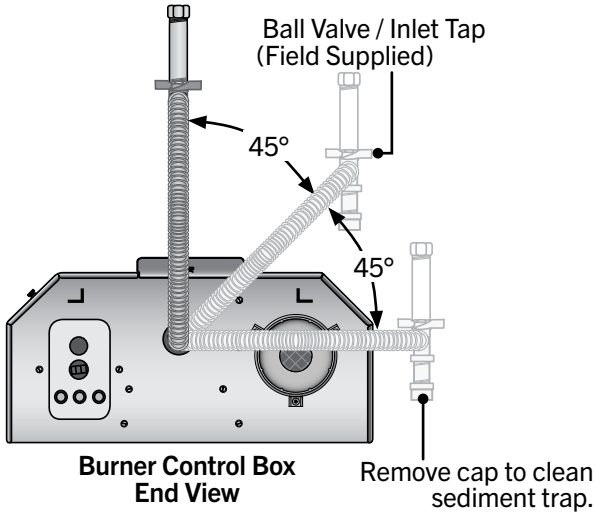

Refer to Chart 3.5 for natural gas and Chart 3.6 for propane gas to determine the cubic feet per hour (CFH) required for the type of gas and size of unit to be installed. To determine the proper pipe diameter, use the CFH value and the length of pipe necessary from Chart 3.7. In the case where several units are serviced by the same main gas line, the total capacity (CFH) and length of main must be adequate to service all appliances downstream of this main.

Chart 3.5 • Natural Gas Consumption

Model	Input	Manifold Pressure (Inches W.C.)	Minimum Inlet Pressure (Inches W.C.)	Gas Consumption* (CFH)
REV-(20,30, 40)-65	65,000 BTU/h	3.5	5.0	61.9
REV-(20, 30, 40)-75	75,000 BTU/h	3.5	5.0	71.4
REV-(30, 40)-100	100,000 BTU/h	3.5	5.0	95.2
REV-(40, 50)-125	125,000 BTU/h	3.5	5.0	119.1
REV-(40, 50, 60)-150	150,000 BTU/h	3.5	5.0	142.9
REV-(50, 60)-175	175,000 BTU/h	3.5	5.0	166.7
REV-(50,60)-200	200,000 BTU/h	3.5	5.0	190.5

* Assumes an average heating value of 1,050 BTU/SCF and a Specific Gravity of 0.60.

Chart 3.6 • Propane Gas Consumption

Model	Input	Manifold Pressure (Inches W.C.)	Minimum Inlet Pressure (Inches W.C.)	Gallons per Hour*
REV-(20,30, 40)-65	65,000 BTU/h	10.0	11.0	0.71
REV-(20, 30, 40)-75	75,000 BTU/h	10.0	11.0	0.82
REV-(30, 40)-100	100,000 BTU/h	10.0	11.0	1.10
REV-(40, 50)-125	125,000 BTU/h	10.0	11.0	1.37
REV-(40, 50, 60)-150	150,000 BTU/h	10.0	11.0	1.64
REV-(50, 60)-175	175,000 BTU/h	10.0	11.0	1.91
REV-(50,60)-200	200,000 BTU/h	10.0	11.0	2.18

* Assumes an average heating value of 2,500 BTU/SCF and a Specific Gravity of 1.53.

Chart 3.7 allows for a 0.3" W.C. pressure drop in the supply pressure from the building main to the inlet of the unit. Refer to the chart for the appropriate range of inlet pressures for each gas type. When sizing the inlet gas pipe diameter, make sure that the unit supply pressure can be met after the 0.3" W.C. pressure drop has been subtracted from the main pressure. If the 0.3" W.C. pressure drop is too high, refer to NFPA 54 or the Gas Engineer's Handbook for other gas pipe capacities.

Chart 3.7 • Maximum capacity for Schedule 40 Metallic pipe, in CFH

Pipe Length	1/2"		3/4"		1"		1-1/4"		1-1/2"		2"	
	Nat	Prop	Nat	Prop	Nat	Prop	Nat	Prop	Nat	Prop	Nat	Prop
10 feet	132	86	278	182	520	340	1050	686	1600	1046	3050	1993
20 feet	92	60	190	124	350	229	730	477	1100	719	2100	1373
30 feet	73	48	152	99	285	186	590	386	890	582	1650	1078
40 feet	63	41	130	85	245	160	500	327	760	497	1450	948
50 feet	56	37	115	75	215	141	440	288	670	438	1270	830
60 feet	50	33	105	69	195	127	400	261	610	399	1150	752
70 feet	46	30	96	63	180	118	370	242	560	366	1050	686
80 feet	43	28	90	59	170	111	350	229	530	346	990	647
90 feet	40	26	84	55	160	105	320	209	490	320	930	608
100 feet	38	25	79	52	150	98	305	199	460	301	870	569
125 feet	34	22	72	47	130	85	275	180	410	268	780	510
150 feet	31	20	64	42	120	78	250	163	380	248	710	464
175 feet	28	18	59	39	110	72	225	147	350	229	650	425
200 feet	26	17	55	36	100	65	210	137	320	209	610	399

Leak Testing

⚠ WARNING

Testing for gas leaks with an open flame or other sources of ignition may lead to a fire or explosion and cause serious injury, or death. Test in accordance with NFPA or local codes.

⚠ WARNING

Gas pressures to the appliance controls must never exceed 14" W.C. (½ PSI). Supply pressures greater than 14" W.C. can damage the controls, resulting in personal injury, property damage, or death.

Use a soap solution or equivalent for leak testing. Leak testing solution must be non-corrosive, and be rinsed off immediately after the leak test. Never test for leak with an open flame. Failure to comply could result in personal injury, property damage, or death.

Always leak test final gas assembly for gas leaks according to the procedures outlined in NFPA 54 and all local codes and/or Standards.

For leak testing on pressures below ½ PSI

Before leak testing, close the field installed manual shut off valve shown on Figure 3.39 on the supply line to isolate the gas valve from the pressure. **NOTE:** All factory installed gas connections have passed an approved leak test.

For leak testing on pressures above ½ PSI

When leak testing with pressures above ½ PSI (14" W.C.), the unit must be isolated from the supply pipe. Close the field installed manual shut off valve, disconnect the supply line to the unit, and temporarily cap the supply line for testing purposes.

Electrical Requirements and Wiring Diagrams

⚠ WARNING

Shock hazard. Disconnect power supply before making wiring connections to prevent electrical shock and equipment damage.

Any original factory wiring that requires replacement must be replaced with wiring material having a temperature rating of at least 600 V, 105°C.

All field installed wiring to the tube heater must be done in accordance with the national, state, and local codes, and to the guidelines in this manual. In the United States, refer to the most current revisions to the Electrical Code ANSI/NFPA 70. In Canada, refer to the most current revisions to the Canadian Electrical Code CSA C22.1 Part 1. The unit must be electrically grounded according to these codes. Line polarity must be observed when making field connections.

Internal Wiring Diagrams

Before wiring this appliance, check the existing wiring; replace if necessary. If any of the original wire supplied with the appliance must be replaced, it must be replaced with copper wiring material having a rating of at least 600 V, 105°C.

Figure 3.41 • REV Internal Wiring Diagram

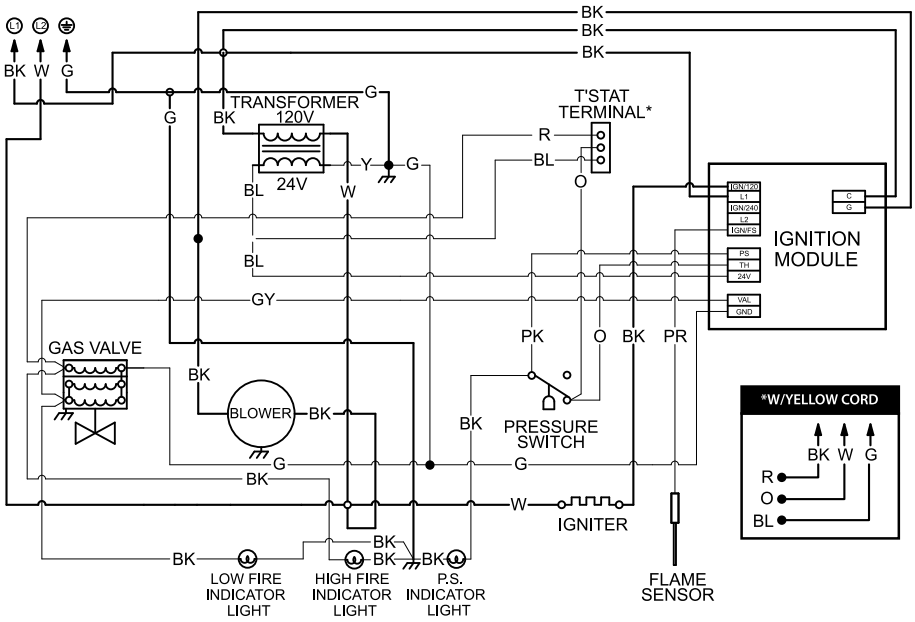

WIRING INFORMATION:

LOW VOLTAGE:

FACTORY STANDARD ————————
FACTORY OPTION —— - —— - ——
FIELD INSTALLED — — — — — — —

LINE VOLTAGE:

FACTORY STANDARD ————————
FACTORY OPTION —— - —— - ——
FIELD INSTALLED — — — — — — —

NOTICE

Connecting the thermostat with a voltage other than 24 V may damage the heater. The REV Series requires a 24 VAC connection to the thermostat. This is either supplied by the heater internally (standard) or by an external transformer (with optional isolation relays, P/N: HLRP). See Figure 3.43.

Field Wiring Supply Voltage

Before proceeding with electrical connections, ensure that the supply voltage, frequency, phase and current capacity meet the requirements specified on the rating plate. A dedicated line voltage supply with properly sized wire should run directly from the main electrical panel to the heater. The power to the unit must be protected with a circuit breaker appropriate for the load. The unit must be electrically grounded in accordance with local codes, or in their absence, with the latest edition of the National Electrical Code, ANSI / NFPA 70 and/or the Canadian Electrical Code CSA C22.1, latest edition.

The heater comes equipped with a supply cord to connect the main power supply. It is located at the rear of the heater's burner box and utilizes a grounding prong. This plug must be connected into an appropriate outlet receptacle that is properly installed and grounded in accordance with local codes and ordinances.

⚠ CAUTION

The power supply to the heater must be within +/- 5% of the voltage rating as indicated on the rating plate of the appliance. If input power does not meet these specifications, contact your utility company.

⚠ WARNING

Electric Shock Hazard

Do not force the three-prong plug into the grounded outlet, modify the plug, or use an adapter. Never operate this appliance if the cord or plug is damaged.

The grounding receptacle must be installed within 5 feet of the heater's service panel and located in the space occupied by the appliance. When plugging in the heater, make sure the supply cord is protected from damage, and keep all cords away from the heater's surfaces and out of the clearances to combustibles zones (see page 9). When routing the electrical supply for the unit, ensure that it does not interfere or obstruct the heater's service panel.

Thermostat Connection

NOTE: Different thermostats operate according to their particular features. Refer to the thermostat's specifications for details.

Prior to connecting the thermostat wire to the heater, check to make sure the wires will be long enough to allow for the heater to freely expand and contract without causing undue strain on the wires or terminal. Use 18 gauge wire (or larger) that is suitable for a NEC Class 2 rating for thermostat connections.

Each REV Series heater requires a two stage thermostat rated for 24 VAC to operate. The heater comes standard with a terminal strip for making the thermostatic connection, located on the back panel.

Thermostat Location

The location of the thermostat should be determined by the desired heating requirements and be mounted on an inside wall five (5) feet above the finished floor. Locate the thermostat in a conspicuous location, away from where it could be influenced by heat from the unit or other sources, as this may cause the unit to short cycle. Care should be given to locate the thermostat away from drafts or frequently opened doors. To prevent drafts inside the wall from affecting the thermostat's performance, plug hole for the wire with insulation or suitable caulk. For further information, see the accompanying instructions with the thermostat.

The thermostat terminal designations are as follows:

R: 24 VAC Power
W1: Call for Heat - Low Fire
W2: Call for Heat - High Fire
C: Common for 24 VAC Power (if required for thermostat power)

24 VAC is supplied from an internal 40 VA transformer. **DO NOT** supply 24 VAC to the terminal strip.

Figure 3.42 • Single Two Stage Heater, Single Thermostat Connection

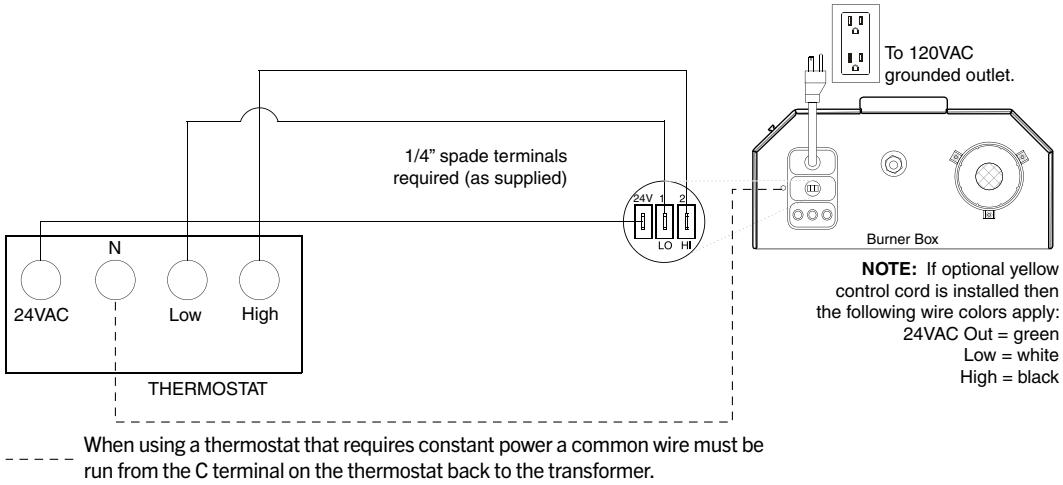

Controlling Multiple Heaters with a Single Control Device

Figure 3.43 • Multiple Heaters, Single Thermostat Connection with Relay Option

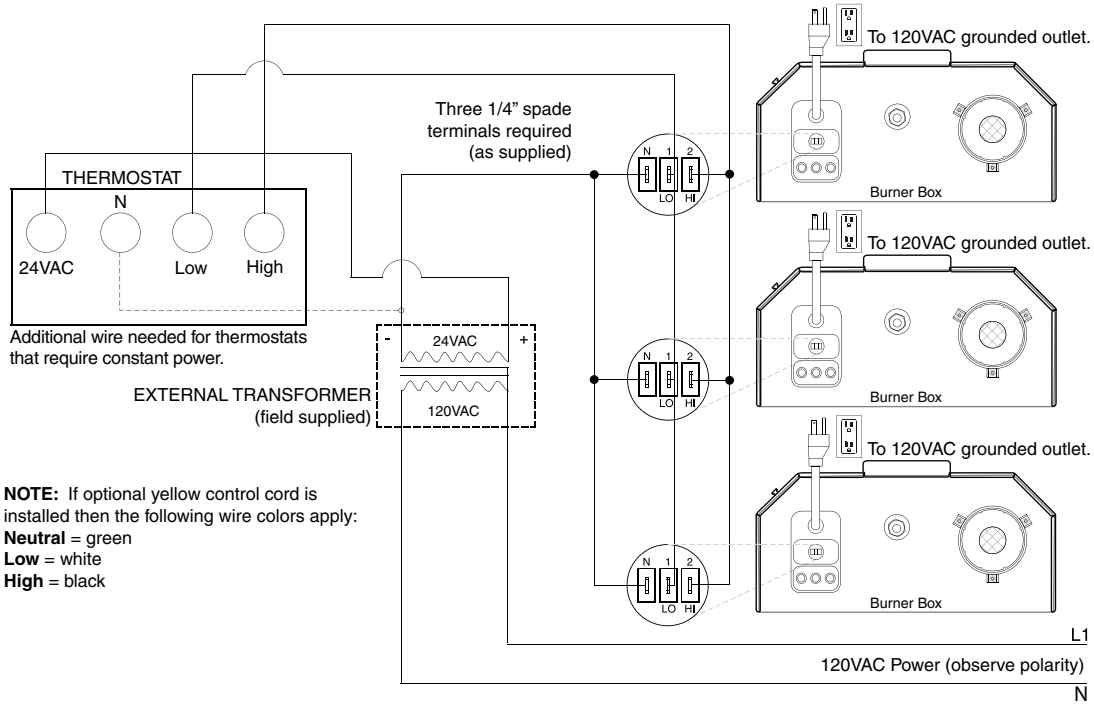

Unit Start-up (Commissioning)

⚠ WARNING

Improper installation, adjustment, alteration, service, or maintenance can cause property damage, serious injury, or death. This heater must be installed and serviced by a trained gas installation and service personnel only.

⚠ CAUTION

Shock Hazard.

Before attempting to perform any service or maintenance, turn electrical power to unit OFF at disconnect switch.

Pre-Commissioning

Verify that the installation conforms to all of the specifications of the manual as well as with local, state, and national codes. In absence of local codes, the radiant heater must be installed according to the current National Fuel Gas Code ANSI Z223.1 (NFPA 54). In Canada, the installation must conform to the current National Standard of Canada CSA-B149 Sections 1 & 2.

Prior to commissioning the unit, verify that:

- ✓ The gas type listed on the rating label matches that of your application.
- ✓ The gas connections have been purged of air and properly leak tested.
- ✓ The voltage type and frequency listed on the rating label matches that of your application.
- ✓ The unit is properly grounded as per the National Electrical Code, ANSI/NFPA 70 or Canadian Electrical code CSA C22.1 Part 1.
- ✓ The unit is properly mounted to a permanent structure able to bear the weight of the unit.
- ✓ The proper mounting height is observed for the application.
- ✓ All clearances to combustibles distances and service clearances are maintained.
- ✓ The unit is properly isolated or installed to prevent excessive vibration.
- ✓ The unit is level horizontally.
- ✓ Venting is properly installed in accordance with this manual and any applicable codes.
- ✓ Combustion air supply is sufficient to support proper operation at all times.

Verify Proper Inlet Pressure

Before starting up the unit, smell all around the heater for gas. Be sure to smell next to the floor as some gas is heavier than air and will settle on the floor.

When turning the gas shut off valve, only use your hand. Never use tools to turn the knobs as it may damage the valve resulting in a fire or explosion. If the knob is stuck, do not try to repair it; contact a qualified service technician or your local gas company.

To verify the proper inlet pressures, follow the following steps:

❶ Turn off the gas supply at the manual gas shut off valve and remove the plastic top panel.

❷ Remove the inlet pressure tap plug on the gas control valve.

❸ Connect a pressure gauge, tube, and manometer.

❹ Turn on the gas supply at the manual gas shut off valve.

❺ Turn on the electrical power to the heater.

❻ To light the burner, set the room thermostat to a point above room temperature.

NOTE: This heater is equipped with an ignition device which automatically lights the burner. This heater cannot be lit manually. Do not try to light the burner by hand.

Verify *minimum* inlet gas supply pressure:

❼ Turn on all other gas appliances that are on the same supply line. If the other gas appliances have multiple inputs, set it to the maximum rating.

❽ Observe the pressure rating on the pressure gauge.

The minimum inlet gas supply pressure for:

- Natural gas is 5.0 inches W.C.
- Propane gas is 11.0 inches W.C.

Verify *maximum* inlet gas supply pressure:

❾ Turn off all other gas appliances on the same supply line.

❿ Observe the pressure reading on the pressure gauge.

The maximum inlet gas supply pressure for:

- Natural gas and propane gas is 14.0 inches W.C.

IMPORTANT: If the inlet gas supply pressure is not within the minimum and maximum range as shown on the rating plate, contact your gas supplier.

Removing pressure gauge from inlet port on gas valve:

Set thermostat or other control device to the lowest set point.

⓫ After heater has completed the post-purge cycle, turn off the electrical power to the heater.

⓬ Turn off the gas supply at the manual gas shut off valve.

⓭ Remove the pressure gauge tube from the inlet pressure tube.

⓮ Replace the inlet pressure tap plug on the gas control valve.

⓯ Leak check the re-installed pressure tap plug using a soap solution or equivalent method as described in ANSI Z223.1 (NFPA 54).

Verify Manifold Pressure

Before starting up the unit, smell all around the heater for gas. Be sure to smell next to the floor because some gas is heavier than air and will settle on the floor.

When turning the gas shut off valve, only use your hand. Never use tools to turn the knobs, as it may damage the valve resulting in a fire or explosion. If the knob is stuck, do not try to repair it; contact a qualified service technician or your local gas company.

To verify the proper manifold pressure, follow the following steps:

❶ Remove the plastic top panel. Turn off the gas valve with the switch located on the valve body.

❷ Remove the manifold pressure tap plug on the gas control valve.

❸ Connect the pressure gauge tube and manometer.

❹ Turn on the gas valve with the switch located on the valve body.

❺ Turn on the electrical power to the heater.

❻ To light the main burner, set the room thermostat to a point above room temperature.

NOTE: This heater is equipped with an ignition device, which automatically lights the burner. This heater cannot be lit manually. Do not try to light the burner by hand.

Verify manifold pressure:

❼ After the unit has successfully ignited, wait five minutes prior to taking any readings. The heater must be in a steady state of operation prior to taking a manifold pressure reading.

❽ While waiting for the unit to stabilize, observe the characteristics of the flame. The flame should be stable and should not lift from the burner. The burner color should be light blue and should not create excessive noise.

❾ After five minutes, observe the pressure rating on the pressure gauge.

The target manifold pressure for:

- Natural gas is 3.5 inches W.C.
- Propane gas is 10.0 inches W.C.

NOTE: Manifold pressure of the heater is pre-set at the factory. No adjustment should be necessary.

During the verification process, a tolerance of +/- 5% of the full scale is acceptable due to varying atmospheric conditions.

If manifold pressure is outside of this tolerance, an adjustment may be necessary.

Removing pressure gauge from manifold port on gas valve:

❿ Set thermostat or other control device to the lowest set point.

⓫ After heater has completed the post-purge cycle, turn off the electrical power to the heater.

⓬ Turn off the gas valve with the switch located on the valve body.

⓭ Remove the pressure gauge tube and the manometer.

⓮ Replace the manifold pressure tap plug on the gas control valve.

⓯ Leak check the re-installed pressure tap plug using a soap solution or equivalent method as described in ANSI Z223.1 (NFPA 54).

Prior to Leaving the Job Site

Prior to leaving the job site, verify the following:

- ✓ Service access door is properly secured to the unit.
- ✓ The heater is clear of any objects that would interfere with the proper air circulation or that violate the listed clearances to combustibles.
- ✓ Manual gas shut off is ON.
- ✓ Electrical power is ON.
- ✓ Thermostat is set to desired temperature.
- ✓ Properly dispose of all packaging materials.
- ✓ Check to be sure you have all of your tools.
- ✓ Leave this manual with the owner or end user.

Chart 3.8 • Manifold Pressure

Type of Gas	Required Manifold Pressure	Minimum Inlet Pressure	Maximum Inlet Pressure
Natural	3.5 Inches W.C.	5.0 Inches W.C.	14.0 Inches W.C.
Propane	10.0 Inches W.C.	11.0 Inches W.C.	14.0 Inches W.C.

Pressure Equivalents: 1” W.C. equals .058 oz/in^2 equals 2.49 mbar.

High Altitude Operation

⚠ WARNING

Explosion hazard. This heater must be converted by a trained gas installation and service personnel only. Failure to comply could result in personal injury, asphyxiation, death, fire, or property damage.

High altitude operation of this tube heater is approved, without modification, for elevations up to 4,500 feet (1,372 m) above MSL (sea level) in the United States. Contact the factory for installations above these elevations.

4.0 Operation

⚠ WARNING

This appliance does not have a pilot ignition. It is equipped with an ignition device which automatically lights the burner. **Do not** attempt to light the system by hand.

BEFORE OPERATING, smell all around the appliance area for gas. Be sure to smell next to the floor as some gas is heavier than air and will settle to the floor. Refer to page 1 "If you smell gas" and on safety label affixed to the heater.

Do not use this appliance if any part has been under water. Immediately call a qualified service technician to inspect the appliance and to replace any part of the control system and any gas control which has been under water.

Operating Instructions

⚠ WARNING


Use only your hand to turn the manual shutoff. Never use tools. If the knob will not turn by hand, don't try to repair it; call a qualified technician. Force or attempted repair may result in a fire or explosion.

Lighting Procedures:

❶ **STOP!** Read the safety information above.
❷ Set the thermostat to the lowest setting.
❸ Turn OFF all electrical power to the appliance.
❹ Turn manual shutoff clockwise ↷ to "OFF".
❺ Wait 5 minutes to clear out any gas. If you smell gas STOP! Follow the safety information found on page 1 "If you smell gas" and on safety label affixed to the heater. If you do not smell gas, proceed to step 6.
❻ Turn manual shutoff knob counterclockwise ↶ to "ON".
❼ Turn ON all electrical power to the appliance.
❽ Set thermostat to desired setting.
❾ If the appliance will not operate, follow instructions below to turn OFF gas to the appliance and call your service technician or gas supplier.

Shutdown Procedures:

❶ Set the thermostat to the lowest setting.
❷ Turn OFF all electrical power to the appliance if service is to be performed.
❸ Turn manual shutoff knob clockwise ↷ to "OFF". **Do not** force.

⚠ WARNING

This heater must be installed and serviced by trained gas installation and service personnel only.

Do not bypass any safety features or the heater's built in safety mechanisms will be compromised.

Sequence of Operation

Standby: The 35-66 control continually checks for internal faults, circuit integrity, and relay contact positioning.

Starting Circuit: Upon a call for heat, the control verifies that the differential switch is in the proper position (open). The control energizes the fan. Once operational static pressure is achieved, the differential switch will close initiating the ignition sequence. The glo-bar is powered and the gas valve opens after 45 seconds. If the flame is not sensed, the heater will attempt to re-ignite for a total of three (3) trials for ignition before proceeding to soft lockout.

Single Stage Running Circuit: After ignition, the flame rod monitors burner flame. If sense of flame is lost, the control closes the gas valve within one second and a new trial sequence (identical to the starting sequence) is initiated. If flame sense is not established within 8.5 seconds, the heater will attempt two (2) additional ignition sequences before proceeding to soft lockout. The control can be reset by briefly interrupting the power source.

Two Stage Running Circuit: The second stage on the gas valve is powered directly from the second stage of the thermostat. In order for two stage to flow to a higher output, single stage must be energized as well. The thermostat determines which stage to maintain for the desired temperature.

Shut Down: When the thermostat is satisfied, the fan will enter a two (2) minute post-purge cycle. Refer to Soft Lockout and Hard Lockout under Diagnostics below.

Diagnostics

Lockout: The controls will automatically lockout the heater system when an external or system fault occurs. There are two types of lockout:

Soft Lockout: The heater will attempt to light three times. In the event of a failed attempt to light, (gas pressure, valve, no flame sense etc.), the heater will enter a soft lockout period for 15 minutes and then attempt to light three more times before entering Hard Lockout mode.

Hard Lockout: If proof of flame is not established, a component failure occurs or blockages are evident, the heater will enter hard lockout. If lockout occurs, the control can be reset by briefly interrupting the power source. Refer to Charts 4.1 and 4.2 on page 57 for a description of LED codes.

Externally located operational indicator lights are provided to assist in troubleshooting of the heater. Refer to page 58 for additional troubleshooting.

Figure 4.1 • Operational Indicator Lights

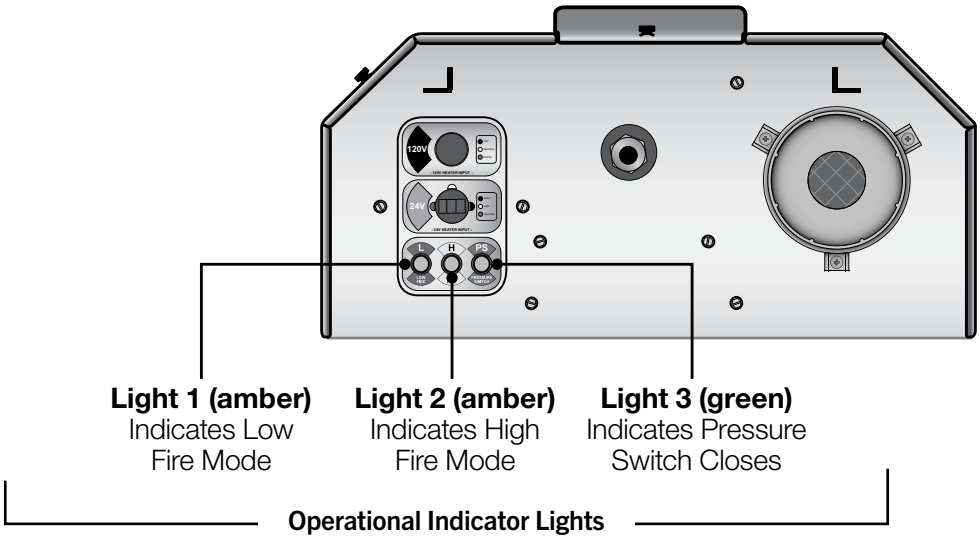

Chart 4.1 • LED Diagnostic Codes - Fenwal Circuit Board

LED CODE	FAULT STATUS	FAULT CODE DELAY*
Initial flash on power up, then steady off	Normal operation	Immediate
Steady on	Module failure/Internal fault	Immediate
1 flash	Ignition failure	32 minutes
1 flash	Reverse polarity	30 seconds
2 flashes	APS 1 failure	12 minutes
3 flashes	APS 2 failure	22 minutes
4 flashes	Solenoid valve fault/Leaky valve/Flame amplifier fault	Immediate
No flash on 117 V start-up	Transformer fault	Immediate

*Some LED codes have a time delay before the LED will flash.

Chart 4.2 • LED Diagnostic Codes - Capable Controls Board

LED CODE	FAULT STATUS	FAULT CODE DELAY*
Initial flash (Red) on power up	Normal operation	Immediate
Steady flash (Green) during Ignition	Normal operation	Immediate
Steady on (Green) after flame sense.	Normal operation	1 minute
1 flash (Red)	Ignition failure	3 minutes
1 flash (Red)	Reverse polarity	30 seconds
2 flashes (Red)	Ignitor error	12 seconds
3 flashes (Red)	Gas valve error	
4 flashes (Red)	Line voltage frq. error	
5 flashes (Red)	Internal control error	
6 flashes (Red)	Pressure switch error	

*Some LED codes have a time delay before the LED will flash.

5.0 Maintenance

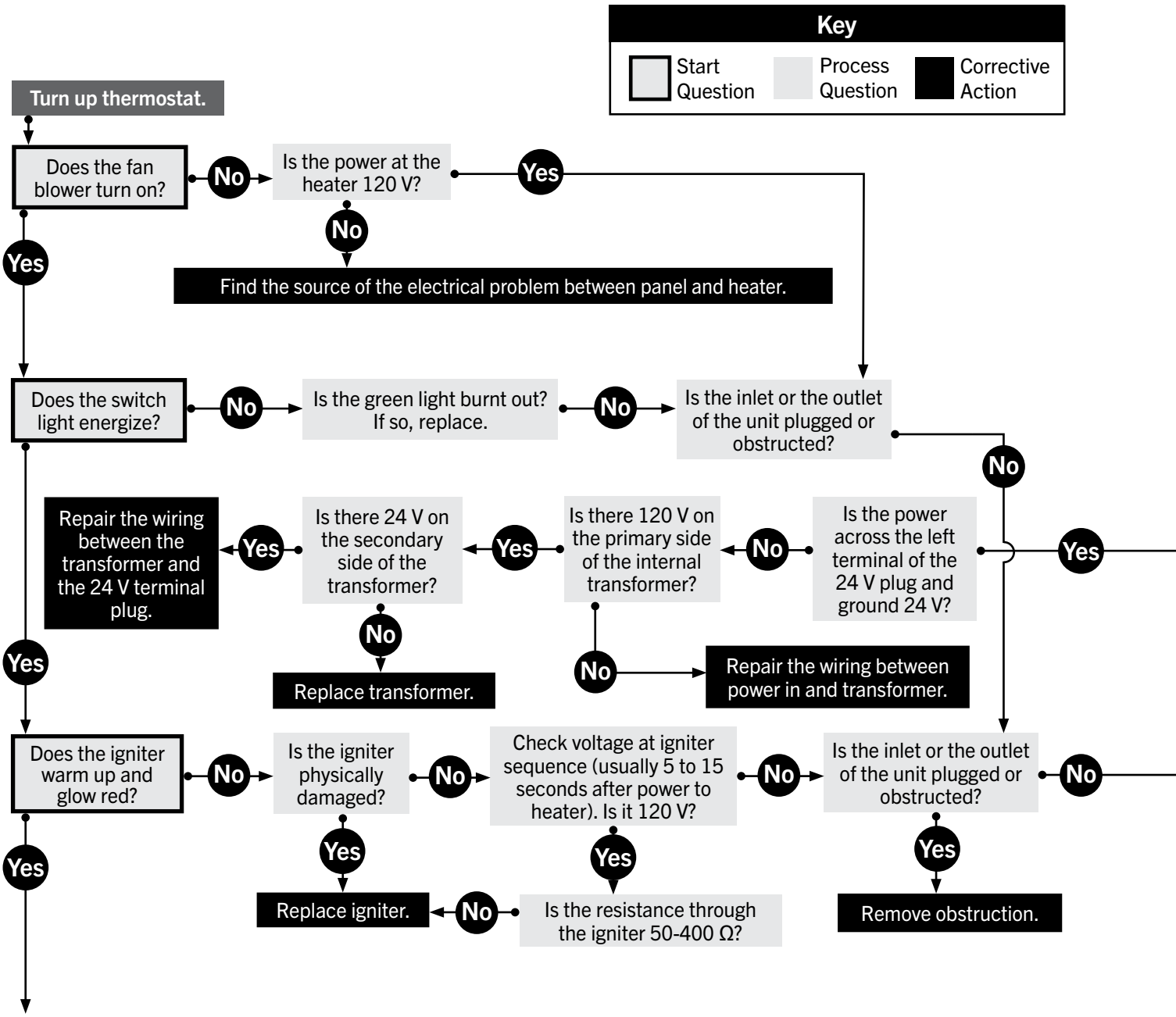

Continued on page 60

NOTICE

Bypassing any switch is intended for testing purposes only. Do not leave switch bypassed during normal operation or the heater's built-in safety mechanisms will be compromised.

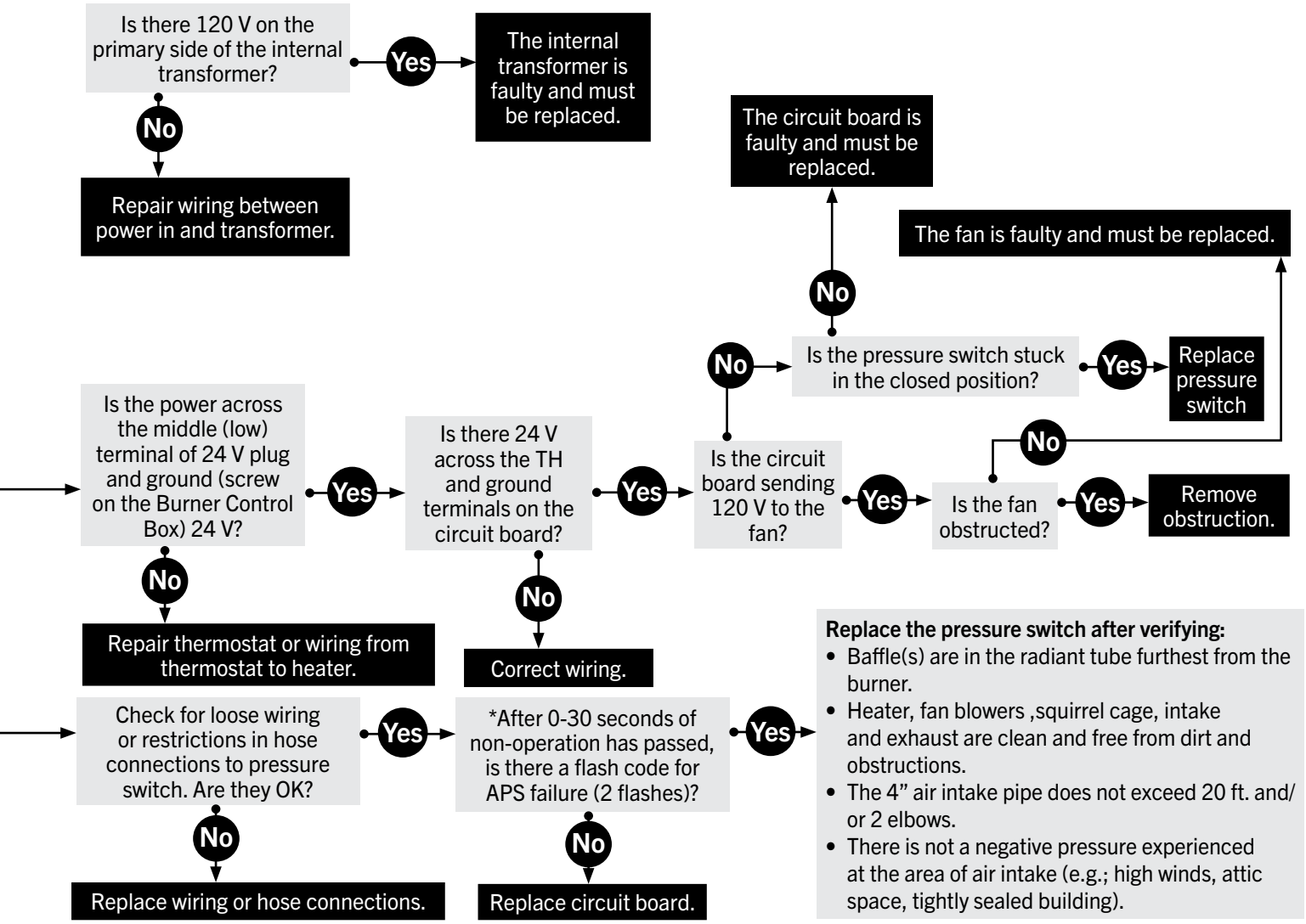

* Refer to LED diagnostic Fault Code Chart on page 55.

Continued from page 58

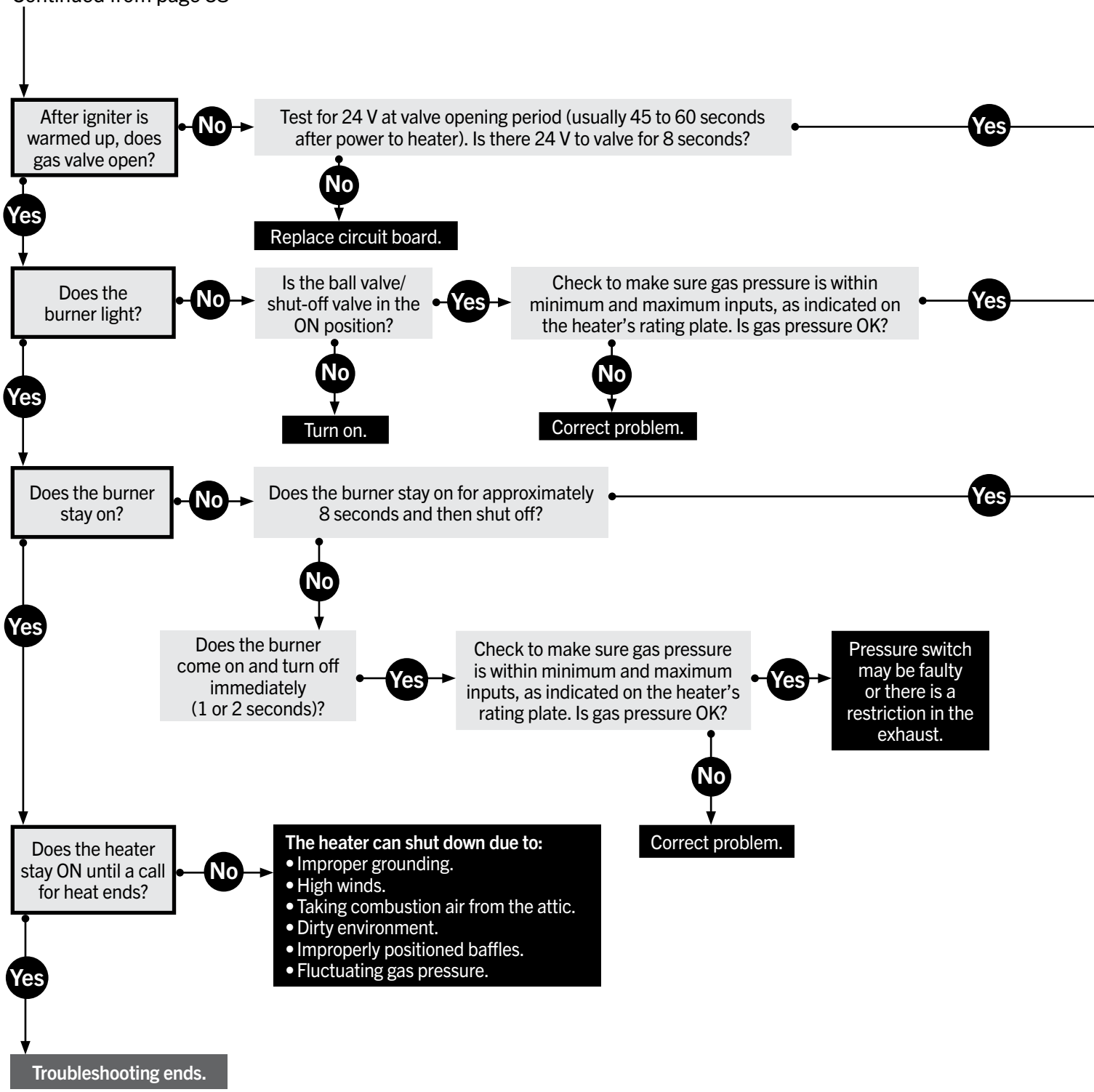

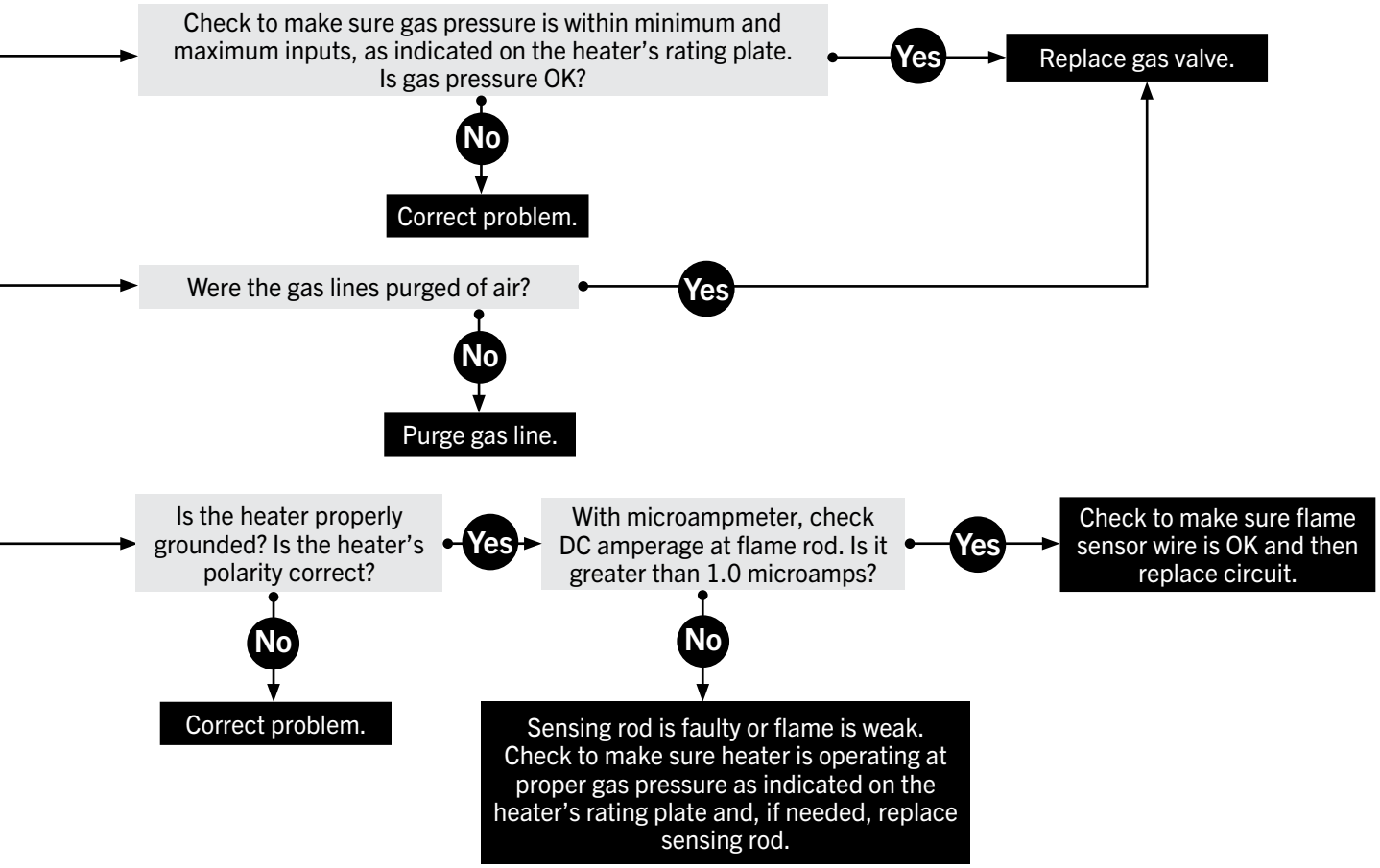

If heater does not go into high fire mode:

NOTE: To confirm that the heater is not in high fire mode, check manifold pressure. If manifold pressure is 3.3" to 3.5" for natural gas or 9" to 10" for propane, the light is faulty and should be replaced.

When the heater is in low fire mode, manifold pressure is approximately 2.0" to 2.5" for natural gas or 5.0" to 6.5" for propane. If this is the case, the following troubleshooting steps should be followed:

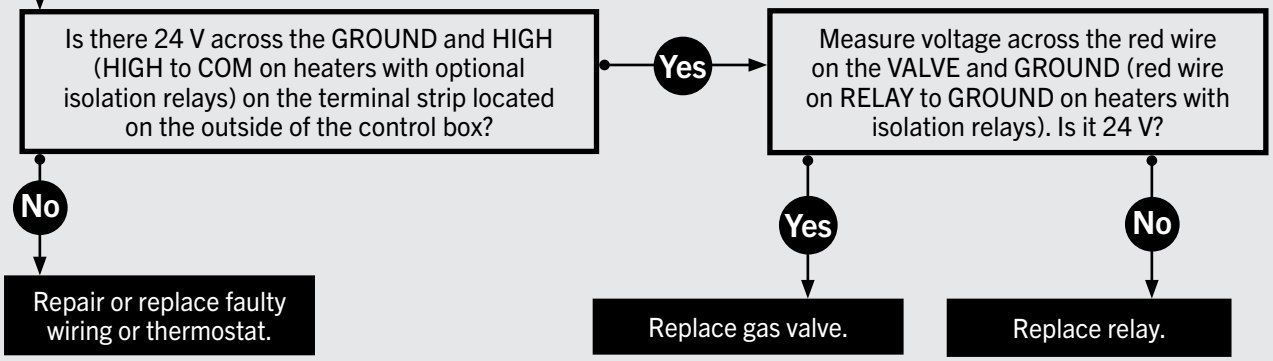

Figure 5.1 • Burner Assembly Components

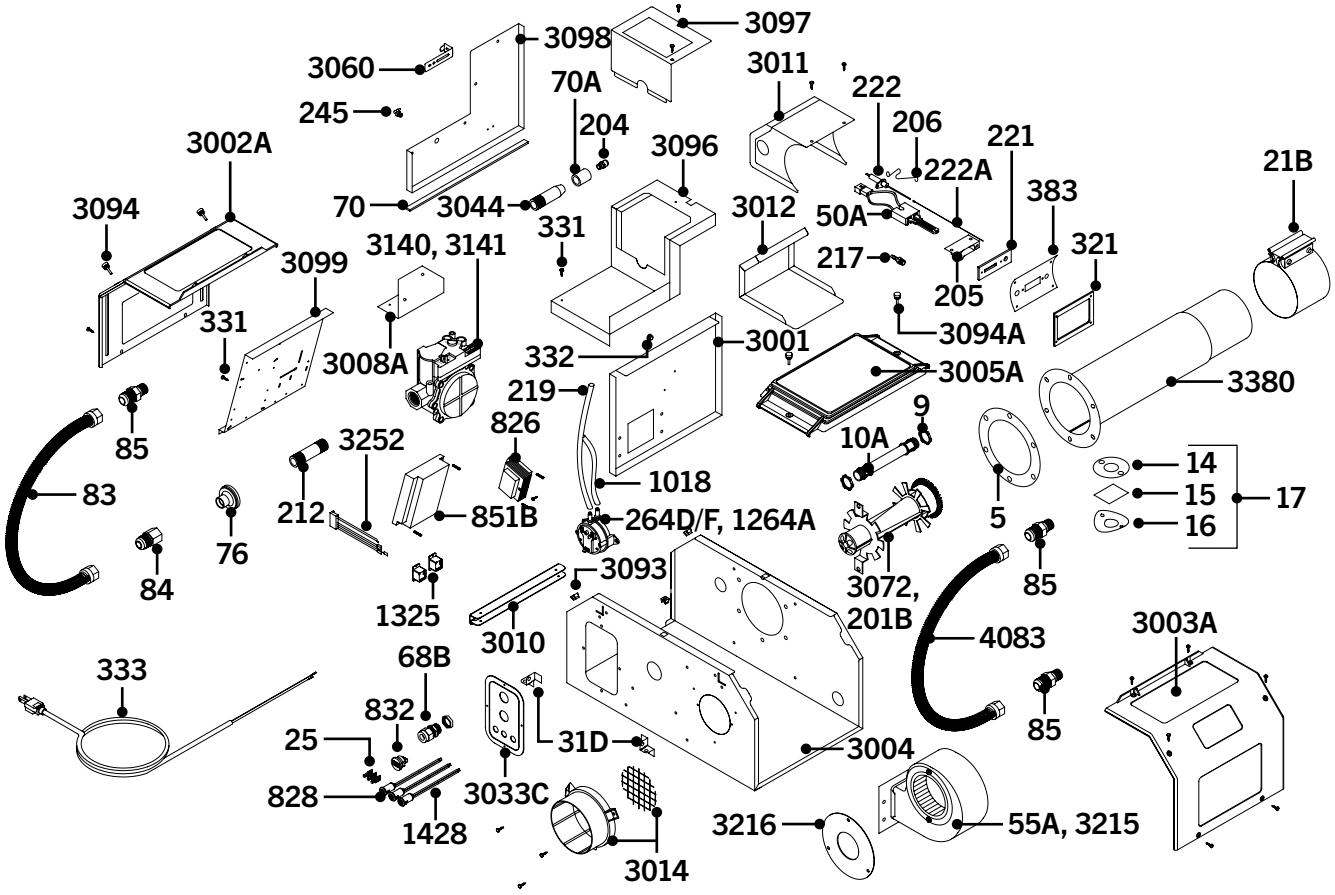

Chart 5.1 • Parts List

Part #	Description	Part #	Description
TP-5	Flange Gasket	TP-85	½ in. Male/Male Flare Fitting
TP-9	Conduit Coupling	TP-201B	High BTU Burner (Tan)
TP-10A	Conduit 4” x ¾”	TP-204	Gas Orifice (consult factory)
TP-14	Sight Glass Gasket	TP-205	Glo-Bar™ Holder
TP-15	Sight Glass	TP-206	Glo-Bar™ Holder Spring Clip
TP-16	Sight Glass Washer	TP-212	½” x 3” Pipe Nipple
TP-17	Sight Glass Kit	TP-217	Brass Pressure Switch Barb Fitting
TP-21B	4 in. Standard Tube Clamp	TP-219	Differential Vinyl Sensing Tube (Burner)
TP-25	¼ in. Female Spade Terminal (Qty. 3)	TP-220	Stainless Steel Tube Clamp (150 & 200 MBH)
TP-26A	10 ft. Aluminized Radiant / Combustion Tube	TP-221	Glo-Bar™ Holder Gasket
TP-26B	10 ft. Titanium Coated Combustion Tube	TP-222	Flame Rod
TP-31D	Interlocking Mounting Bracket (Qty. 2)	TP-222A	Flame Rod Wire
TP-50A	Glo-Bar™ Igniter	TP-245	3⁄16” x ⅛” Plastic Gas Valve 90° Vent
TP-55A	1/20 HP Inducer Assembly (65–150 MBH)	TP-264D	Differential Pressure Switch, 65–75 MBH
TP-65I	36 in. Interlocking Turbulator Baffle	TP-264F	Differential Pressure Switch, 150–200 MBH
TP-68B	Large Strain Relief Bushing	TP-321	Ignition Plate Gasket
TP-70	½ in. Control Box Gasket (10.3 in.)	TP-331	Green Self-Tapping Ground Screw (Qty. 2)
TP-70A	1 in. Control Box Gasket (6 in.)	TP-332	Divider Grommet
TP-76	Rubber Grommet	TP-333	60 in. Black 120 V Power Cord with Ground
TP-83	24 in. Stainless Steel Flexible Gas Connector	TP-383	Glo-Bar™ Igniter Plate
TP-84	½ in. Female/Male Flare Fitting	TP-826	40VA Transformer

Figure 5.2 • Tube and Reflector Components

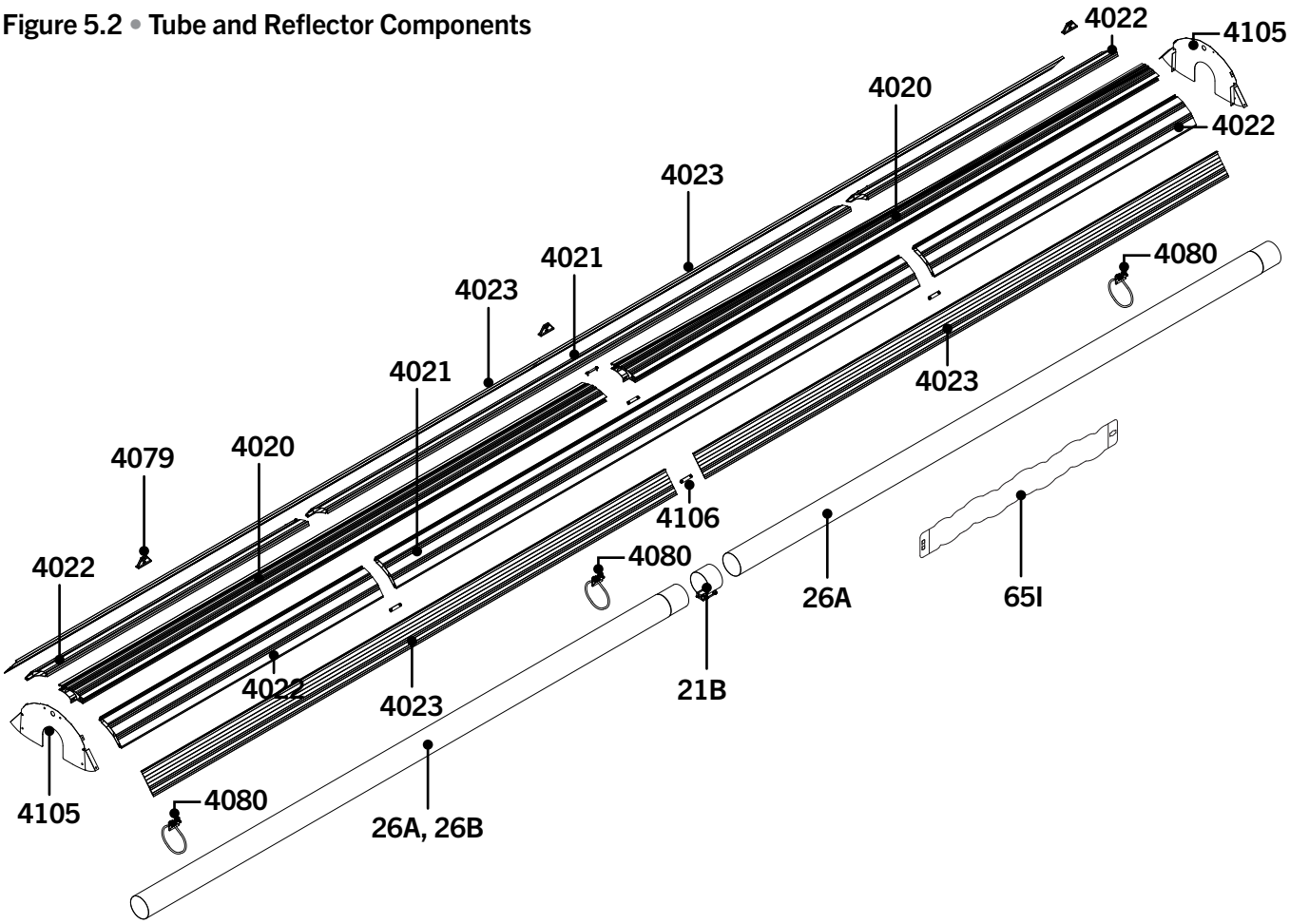

Chart 5.2 • Parts List

Part #	Description	Part #	Description
TP-828	24 V Yellow Operational Indicator Light (Qty. 2)	TP-3093	#8-23 Cage Nut (Qty. 4)
TP-832	Thermostat Terminal Strip	TP-3094A	#8-32x1/2” Zinc Coated Knurled Thumb Screw (Qty. 4)
TP-851B	35-66 Diagnostic Circuit Board	TP-3096	Valve Compartment Bottom Panel
TP-1018	Differential Switch Vinyl Sensing Tube (Exhaust)	TP-3097	Valve Compartment Top Panel
TP-1264A	Differential Pressure Switch, 100 to 125 MBH	TP-3098	Valve Compartment Top Panel
TP-1325	Optional HLRP Isolation Relay* (Qty. 2)	TP-3099	Controls Mounting Panel
TP-1428	24 V Green Operational Indicator Light	TP-3140	Natural Gas Valve Assembly
TP-3001	Divider Panel	TP-3141	Propane Gas Valve Assembly
TP-3002A	Plastic End Panel, Control Compartment	TP-3215	1⁄15 HP Inducer Assembly (175–200 MBH)
TP-3003A	Plastic End Panel, Fan Compartment	TP-3216	Reducer Plate (175–200 MBH)
TP-3004	V3 Control Box	TP-3252	4-Piece Wire Harness Set
TP-3005A	Plastic Valve Chamber Lid	TP-3380	V3 16” HSI Burner Tube w/Flange and Fittings
TP-3008A	Gas Valve Mounting Bracket	TP-4020	10 ft. Reflector Core
TP-3010	Service Panel Hinge	TP-4021	10 ft. Reflector Wing
TP-3011	V3 Igniter Box	TP-4022	5 ft. Reflector Wing
TP-3012	V3 Igniter Box Cover	TP-4023	10 ft. Reflector Winglet
TP-3014	Plastic Air Orifice with Screen	TP-4079	Hanging Tab
TP-3033C	Power Entry Plate	TP-4080	Hanger
TP-3044	Gas Manifold	TP-4083	Pre-Heat Air Hose
TP-3060	V3 Pressure Switch Mounting Bracket	TP-4105	Reflector End Cap
TP-3072	Low BTU Burner (Green)	TP-4106	Reflector Connecting Bracket

⚠ WARNING

Personal injury or death may result if maintenance is not performed by properly trained gas installer or service personnel. Contact the installing distributor or place of purchase for service. **Do not operate heating system if repairs are necessary**.

Allow heater to cool prior to servicing.

Disconnect power to heater before servicing.

Use protective glasses when maintaining the heater.

Routine Inspection

At least once per year, the heating system shall be inspected and serviced by trained gas installation and service personnel only. This inspection should be performed at the beginning of the heating season to ensure that all heater components are in proper working order and that the heating system operates at peak performance. Particular attention should be paid to the following items.

- **Clearances to Combustibles**: Inspect the area near the unit to be sure there is no combustible material located within the minimum clearance requirements listed in this manual. Under no circumstances should combustible material be located within the clearances specified in this manual. Failure to provide proper clearance could result in personal injury or equipment damage from fire.
- **Gas Connection:** Inspect the integrity of the gas connection to the heater. Check for leaks, damage, fatigue, or corrosion. Do not operate if repairs are necessary and turn off gas supply to the heater. Contact service personnel.

To check gas tightness of the safety shut-off valves, turn off the manual valve upstream of the appliance combination control. Remove the hex head plug on the inlet side of the combination control and connect a manometer to that tapping.

Turn the manual valve on to apply pressure to the combination control. Note the pressure reading on the manometer, then turn the valve off. Any loss of pressure indicates a leak. If leak is detected, use a soap solution to check all threaded connection. If no leak is found, combination control is faulty and must be replaced before putting appliance back in service.

- **Blower Motor:** Annual oiling of the blower motor with SAE oil will extend bearing life significantly. Motors with sealed ball bearings (no oil ports) do not require oiling. Ensure that the squirrel cage in the blower is kept clean. If dirt becomes a problem, installation of outside air intake ducts for combustion is recommended.

  Check lubrication instructions on motor. If oiling is required, add three or four drop of SAE 20 electric motor oil.

  - After three years or 25,000 hours (for light-duty operation).
  - Annually after three years or 8,000 hours (for medium-duty operation).
  - Annually after one year or 1,500 hours (for heavy-duty operation).

NOTICE

Never over-oil the motor or premature failure may occur.

- **Vent pipe system**: Check the outside termination and the connections at the heater. Inspect the vent exhausts for leakage, damage, fatigue, corrosion, and obstructions. If dirt becomes a problem, installation of outside air intake ducts for combustion is recommended.
- **Combustion air intake system** (when applicable): Check for blockage and/or leakage. Check the outside termination and the connection at the heater.
- **Heat exchangers**: Check the integrity of the heat exchangers. Replace if there are signs of structural failure. Check for corrosion and/or buildup within the tube exchanger passageways.
- **Burner**: Check for proper ignition, burner flame, and flame sense. Flame should extend directly outward from burner without floating or lifting.
- **Wiring:** Check electrical connections for tightness and/or corrosion. Check wires for damage.
- **Gas Connection:** Inspect the integrity of the gas connection to the heater. Check for leaks, damage, fatigue, or corrosion. Do not operate if repairs are necessary and turn off gas supply to the heater. Contact service personnel.
- **Reflectors**: To maintain effective infrared heating, always keep both sides of the reflector clean. Maintenance can vary significantly depending on the environment. Dirt and dust can be vacuumed or wiped with a soap and water solution. Use metal polish if the reflectors are severely dirty.

Contact service personnel if repairs are necessary. Do not operate unit.

Maintenance Log

Date	Maintenance Performed	Replacement Parts Required

Limited Warranty Terms and Conditions

Three-Year Limited Warranty: Radiant Tube Heaters covered in this manual are warranted by Detroit Radiant Products Company to the original user against defects in workmanship or materials under normal use for three years from date of purchase. Any part which is determined to be defective in material or workmanship and returned to an authorized service location, as Detroit Radiant Products Company designates, shipping costs prepaid, will be, as the exclusive remedy, repaired or replaced at Detroit Radiant Products Company's option. For limited warranty claim procedures, see PROMPT DISPOSITION below. This limited warranty gives purchasers specific legal rights which vary from jurisdiction to jurisdiction.

Additional Limited Warranty: In addition to the above mentioned three-year warranty, Detroit Radiant Products Company warrants the original purchaser an additional extension on the combustion chamber, radiant tubes, and stainless steel burner. This extension excludes electrical/purchased components.

General Conditions: The Company will not be responsible for labor charges for the analysis of a defective condition of the heater or for the installation of replacement parts. The warranties provided herein will not apply if the input of the heater exceeds the rated input at time of manufacturing or if the heater, in the judgment of the Company, has been subjected to misuse, excessive dust, improper conversion, negligence, accident, corrosive atmospheres, excessive thermal shock, excessive vibration, physical damage to the heater, alterations by unauthorized service personnel, operation contrary to the Company's instructions, or if the serial number has been altered, defaced, or removed. The Company shall not be liable for any default or delay in the performance of these warranties caused by contingency beyond its control, including war, government restriction or restraints, strikes, fire, flood, short or reduced supply of raw materials, or parts.

Limitation of Liability: To the extent allowable under applicable law, Detroit Radiant Products Company's liability for consequential and incidental damages is expressly disclaimed. Detroit Radiant Products Company's liability in all events is limited to and shall not exceed the purchase price paid.

Warranty Disclaimer: Detroit Radiant Products Company has made a diligent effort to provide product information and illustrate the products in this literature accurately; however, such information and illustrations are for the sole purpose of identification, and do not express or imply a warranty that the products are merchantable, or fit for a particular purpose, or that the products will necessarily conform to the illustrations or descriptions. Except as provided below, no warranty or affirmation of fact, expressed or implied, other than as stated in the LIMITED WARRANTY above is made or authorized by Detroit Radiant Products Company.

Product Suitability: Many jurisdictions have codes and regulations governing sales, construction, installation, and/or use of products for certain purposes, which may vary from those in neighboring areas. While Detroit Radiant Products Company attempts to assure that its products comply with as many codes as possible, it cannot guarantee compliance, and cannot be responsible for how the product is installed or used. Before purchase and use of a product, review the product applications, and all applicable national and local codes and regulations, and be sure that the product, installation, and use will comply with them. Certain aspects of disclaimers are not applicable to consumer products: e.g., (a) some jurisdictions do not allow the exclusion or limitation of incidental or consequential damages, so the above limitation or exclusion may not apply to you; (b) also, some jurisdictions do not allow a limitation on how long an implied warranty lasts, consequently the above limitation may not apply to you; and (c) by law, during the period of this limited warranty, any implied warranties of implied merchantability or fitness for a particular purpose applicable to consumer products purchased by consumers, may not be excluded or otherwise disclaimed.

Prompt Disposition: Detroit Radiant Products Company will make a good faith effort for prompt correction or other adjustment with respect to any product which proves to be defective within limited warranty. For any product believed to be defective within limited warranty, first write or call dealer from whom the product was purchased. Dealer will give additional directions. If unable to resolve satisfactorily, write to Detroit Radiant Products Company at address on page 68, giving dealer's name, address, date and number of dealer's invoice, and describe the nature of the defect. Title and risk of loss pass to buyer on delivery to common carrier. If product was damaged in transit to you, file claim with carrier.

Kit Contents Check List

Chart 5.3 • Kit Contents for REV Series - Reference the length column for your model.

REV Series Kit Contents

REV-KIT Assembly Kit
(Content quantities vary.)

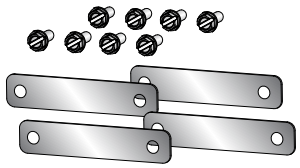

TP-21B 4” Tube Clamp

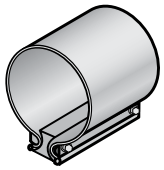

TP-83 24” Stainless Steel Flexible Gas Connector

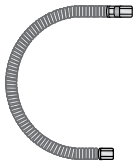

REV Series Installation, Operation, and Maintenance Manual
F/N: LIOREV

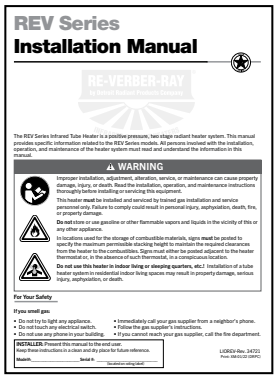
REV Series
Installation Manual

RE-VERBER-RAY
Infrared Radiant Heaters

The REV Series Infrared Tube Heater is a positive pressure, two stage radiant heater system. This manual provides specific information related to the REV Series models. All persons involved with the installation, operation, and maintenance of the heater system must read and understand the information in this manual.

WARNING

Improper installation, adjustment, alteration, service, or maintenance can cause property damage, injury, or death. Read the installation, operation, and maintenance instructions thoroughly before installing or servicing this equipment.

This heater **must** be installed and serviced by trained gas installation and service personnel only. Failure to comply could result in personal injury, asphyxiation, death, fire, or property damage.

Do not store or use gasoline or other flammable vapors and liquids in the vicinity of this or any other appliance.

In locations used for the storage of combustible materials, signs **must** be posted to specify the maximum permissible stacking height to maintain the required clearances from the heater to the combustibles. Signs must either be posted adjacent to the heater thermostat or, in the absence of such thermostat, in a conspicuous location.

Do not use this heater in indoor living or sleeping quarters, etc.! Installation of a tube heater system in residential indoor living spaces may result in property damage, serious injury, asphyxiation, or death.

For Your Safety

If you smell gas:
- Do not try to light any appliance.
- Do not touch any electrical switch.
- Do not use any phone in your building.
- Immediately call your gas supplier from a neighbor’s phone.
- Follow the gas supplier’s instructions.
- If you cannot reach your gas supplier, call the fire department.

INSTALLER: Present this manual to the end user.
Keep these instructions in a clean and dry place for future reference.
Model#: _____ Serial #: _____ (Location on rating label)

LIOREV-Rev. 3/4/22
Prod. 08/01/22-DRPC

TP-4080 Hanger

TP-4083 Pre-Heat Air Hose

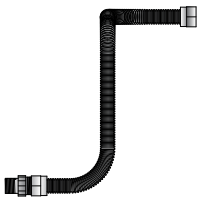

TP-4105 Reflector End Cap

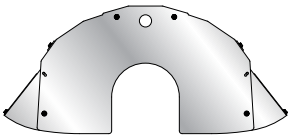

Part No.	Description	REV-20	REV-30	REV-40	REV-50	REV-60
REV-KIT	Bracket & Hardware Kit	1	1	1	1	1
TP-21B	4” Tube Clamp	2	3	4	5	6
TP-83	24” S.S. Flexible Gas Connector	1	1	1	1	1
TP-4080	Hanger	3	4	5	6	7
TP-4083	Pre-Heat Air Hose	1	1	1	1	1
TP-4105	Reflector End Cap	2	2	2	2	2
LIOREV	REV Series Installation Manual	1	1	1	1	1
Filled By:						

Approvals

- ANSI Z83.20-2016 and CSA 2.34-2016
- Indoor approval
- Commercial approval

Limited Warranty

- 3 year - Burner box components
- 5 years - Combustion and radiant tubes
- 10 years - Stainless steel burner
- See page 67 for terms and conditions

C US

21400 Hoover Road • Warren, MI 48089
Phone: (586) 756-0950 Fax: (586) 756-2626
www.detroitradiant.com • sales@drp-co.com