HEATER SUBMITTAL

RE-VERBER-RAY HEATER SUBMITTAL SHEET

DSCS SERIES PATIO HEATERS

GAS-FIRED, SINGLE STAGE, HIGH INTENSITY INFRARED PATIO HEATERS & ACCESSORIES

PROJECT ID: _____ ADDRESS: _____

PROJECT NAME: _____ _____

DATE: _____ CITY: _____ STATE: _____ ZIP: _____

Submitted By: _____ Address: _____

Company: _____ _____

Phone: _____ City: _____

Email: _____ State: _____ Zip: _____

Engineer: _____ Contractor: _____

Phone/Email: _____ Phone/Email: _____

Address: _____ Address: _____

City: _____ City: _____

State: _____ Zip: _____ State: _____ Zip: _____

QTY.	MODEL #	TAG	HOUSING[1]	INDICATE GAS TYPE	BTU/h INPUT	SHIP WEIGHT	SHIP WEIGHT W/ PH-BKT	TYP. OR RCMD. MOUNTING HEIGHTS[2]	APPROX. AREA HEATED	CONTROL VOLTAGE
	DSCS-31		Black	Natural Gas or Propane	31,000	59 lbs.	65 lbs.	8.0' to 12.0'	8' x 8'	24 VAC
	DSCS-34		Black	Natural Gas	34,000	59 lbs.	65 lbs.	8.5' to 13.0'	9' x 9'	24 VAC
	DSCS-31-SS		Stainless Steel	Natural Gas or Propane	31,000	59 lbs.	65 lbs.	8.0' to 12.0'	8' x 8'	24 VAC
	DSCS-34-SS		Stainless Steel	Natural Gas	34,000	59 lbs.	65 lbs.	8.5' to 13.0'	9' x 9'	24 VAC

[1] Black= Black powder-coated aluminized steel

[2] Typical or recommended mounting heights are provided as a guideline. Actual conditions may dictate variations from this data.

DETROIT RADIANT PRODUCTS COMPANY

Detroit Radiant Products
21400 Hoover Rd.
Warren, MI 48089

Phone: (586) 756-0950
Email: sales@drp-co.com
www.reverberray.com

DSCS SERIES FEATURED SPECIFICATIONS

APPROVALS
- ETL Certified
- Commercial/Industrial/ Residential Outdoor Approval

NOMINAL MANIFOLD PRESSURE
- Natural Gas - 6.0 in. W.C.
- Propane Gas - 10.0 in. W.C.

MINIMUM HEATER INLET PRESSURE
- Natural Gas - 7.0 in. W.C.
- Propane Gas - 11.0 in. W.C.

MAXIMUM INLET PRESSURE
- 1/2 lb. or 14.0 in. W.C.

INLET PIPE SIZE
- 1/2" NPT

ELECTRICAL REQUIREMENT
- 24VAC with a NEC Class 2 transformer (field supplied)

AMP DRAW 24 VAC/20 VA
- 0.65 Amp starting
- 0.48 Amp running

MOUNTING
- 0° to 30° from horizontal
- Optional - Mounting Brackets (PH-BKT(-S)) preset mounting angles and height adjustment

CONTROLS
- Single stage (24 V)
- Switching device
- Timer device

EXTERIOR HOUSING FINISH
- Black coated aluminized steel
- Brushed stainless steel

LIMITED WARRANTY
- 5 years - Ceramic burner
- 1 year - All components

OPTIONAL ACCESSORIES

☐	**PH-BKT**	Adjustable mounting bracket (black powder-coated). Preset 0–30° adjustable wall/ceiling mounting kit.
☐	**PH-BKT-SS**	Adjustable mounting bracket (stainless steel). Preset 0–30° adjustable wall/ceiling mounting kit.
☐	**TR-96VA**	96 VA transformer. Connect up to five (5) DSC Series heaters per transformer.
☐	**PLQ**	Clearance warning plaque. Restates clearances to combustibles warning.

DETROIT RADIANT PRODUCTS COMPANY
Detroit Radiant Products
21400 Hoover Rd.
Warren, MI 48089
Phone: (586) 756-0950
Email: sales@drp-co.com
www.reverberray.com

RE-VERBER-RAY SAFETY SUBMITTAL SHEET

DSCS SERIES CLEARANCES TO COMBUSTIBLES

All listed clearances to combustibles are in inches.

MODEL NO.	BTU/H	VOLTAGE	MOUNTING ANGLE[1]	SIDES	BACK	TOP	BELOW	END(S)	FRONT
31,000 [N,P]	31,000	24 VAC	0°	18	N/A	13	48	12	N/A
			30°	N/A	18	18	40	12	36
34,000 [N]	34,000	24 VAC	0°	18	N/A	13	48	12	N/A
			30°	N/A	18	18	40	12	36

[1] Heaters mounted on an angle between 1° to 30° must maintain clearances posted for 0° or 30°; whichever is greater.

Important! If the heater is mounted beneath a non-combustible surface an 8 in. minimum top clearance must be maintained from the top of the heater to prevent overheating the controls.

Clearance to combustible distances represent a surface temperature of 90°F (32°C) above ambient temperature. Ensure that building materials with a low heat tolerance (i.e, awnings, fabrics, plastics, sprinklers, insulation) are protected against degradation. This may require the heater to be mounted at a distance in excess of the published clearances to combustibles. Contact the factory or the building material manufacturer for additional information.



SIDE VIEW:
LEVEL SIDE TO SIDE

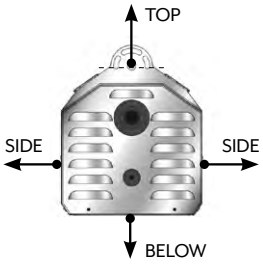

END VIEW:
0° MOUNTING ANGLE

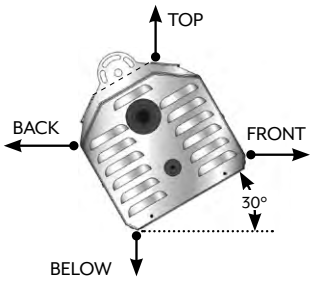

END VIEW:
30° MOUNTING ANGLE



Read and understand the installation, operation, and maintenance manual prior to installing or servicing this unit.

In locations used for the storage of combustible materials, signs must be posted adjacent to the heater's thermostat specifying stacking heights.

DETROIT RADIANT PRODUCTS COMPANY
Detroit Radiant Products
21400 Hoover Rd.
Warren, MI 48089
Phone: (586) 756-0950
Email: sales@drp-co.com
www.reverberray.com

RE-VERBER-RAY DIMENSIONAL SUBMITTAL SHEET

DSCS SERIES DIMENSIONS

Drawing NTS

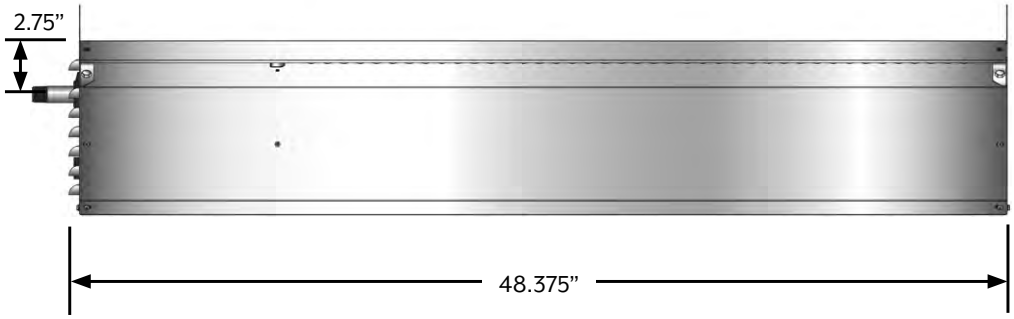

SIDE VIEW

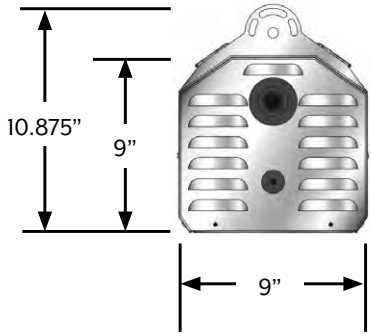

END VIEW

DETROIT RADIANT PRODUCTS COMPANY
Detroit Radiant Products
21400 Hoover Rd.
Warren, MI 48089
Phone: (586) 756-0950
Email: sales@drp-co.com
www.reverberray.com

RE-VERBER-RAY WIRING SUBMITTAL SHEET

DSCS SERIES WIRING DIAGRAMS

Internal Wiring Diagram

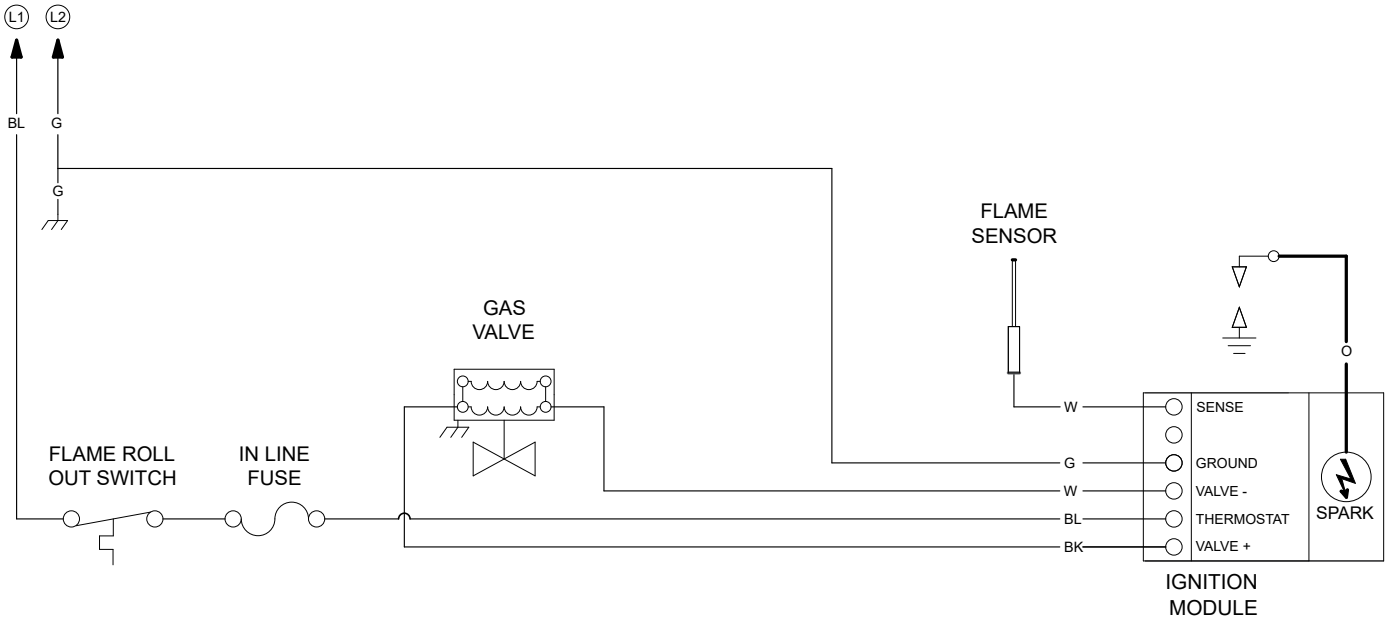

WIRING INFORMATION:

LINE VOLTAGE:

- FACTORY STANDARD
- FACTORY OPTION
- FIELD INSTALLED

LOW VOLTAGE:

- FACTORY STANDARD
- FACTORY OPTION
- FIELD INSTALLED

DETROIT RADIANT PRODUCTS COMPANY
Detroit Radiant Products
21400 Hoover Rd.
Warren, MI 48089
Phone: (586) 756-0950
Email: sales@drp-co.com
www.reverberray.com

DSCS SERIES WIRING DIAGRAMS (cont.)

Field Wiring Diagram

Single Stage Starting Amp Draw: 0.65 Amp
Single Stage Running Amp Draw: 0.48 Amp

Two Stage Starting Amp Draw: 0.61 Amp
Two Stage Running Amp Draw: 0.55 Amp

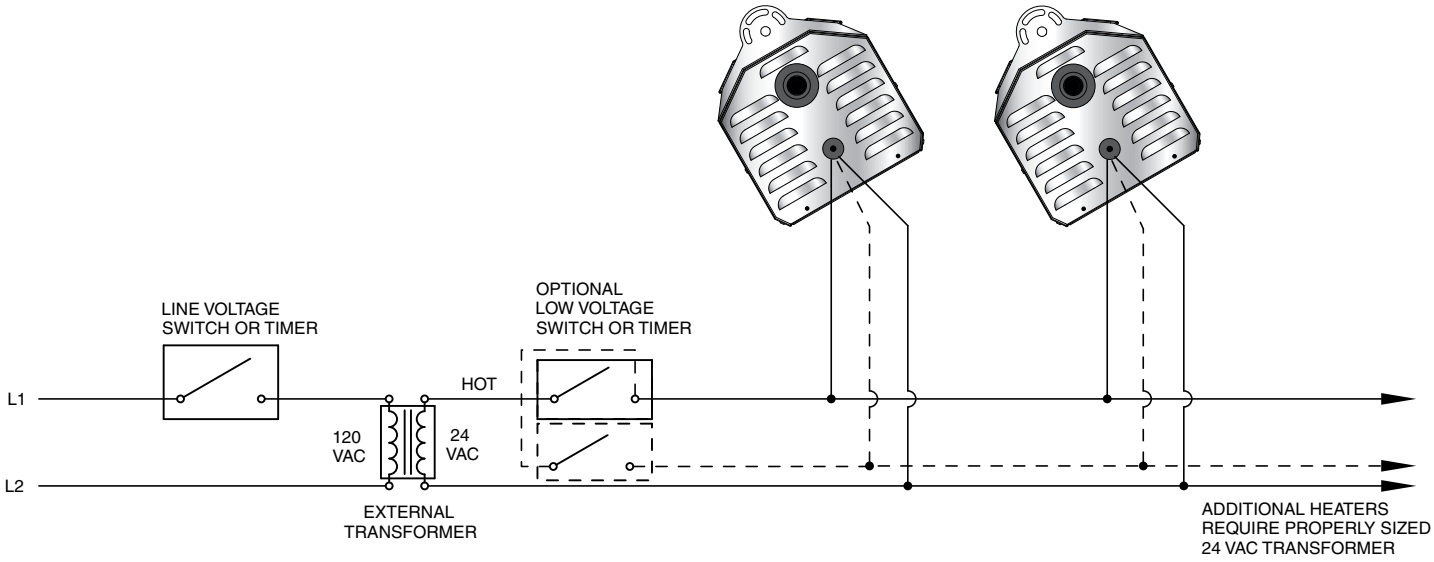

Field Wiring:

1 24 VAC/20 VA (.8 Amp) per heater is required (supplied by installer).

2 Maintain electrical polarity when hooking up multiple heaters.

3 Allow heaters to be switched by zones for heating flexibility.

4 Do not attempt to install transformer inside of heater.

DETROIT RADIANT PRODUCTS COMPANY
Detroit Radiant Products
21400 Hoover Rd.
Warren, MI 48089
Phone: (586) 756-0950
Email: sales@drp-co.com
www.reverberray.com

RE-VERBER-RAY HEATER SUBMITTAL SHEET

DSCS SERIES PATIO HEATERS

GAS-FIRED, SINGLE STAGE, HIGH INTENSITY INFRARED PATIO HEATER WRITTEN SPECIFICATIONS

HEATER PARAMETER/SPECIFICATIONS

A. High Intensity Infrared Patio Heaters shall be Re-Verber-Ray® DSCS Series, as manufactured by Detroit Radiant Products Company, Warren, MI 48089.
B. High Intensity Infrared Patio Heaters shall be Certified to the latest edition of the ANSI Z83.26 Standard.
C. The manufacturer shall provide a published limited warranty to the original owner against defects in workmanship or materials under normal use for a period of one (1) year.
D. High Intensity Infrared Patio Heaters shall be designed to operate when burning natural gas having a heat value of 1025 BTU per cubic foot with a specific gravity of 0.62, or when burning propane gas having a heat value of 2500 BTU per cubic foot with a specific gravity of 1.53.
E. An Installation, Operation and Maintenance manual shall be supplied with each heater.
F. The manufacturer shall have a minimum of 30 years of manufacturing experience producing high intensity infrared heaters.

INFRARED PATIO HEATER CONSTRUCTION

A. The heater's housing shall be constructed of aluminized steel with a corrosion resistant powder-coated finish or 430 Series stainless steel. The emitter shall be composed of a perforated ceramic tile on which combustion takes place on the surface.
B. The heater shall be fitted with a stainless steel windscreen eggcrate grille.
C. The heater shall be of a low profile 'designer series' design and be capable of mounting the unit with .070 gauge hanging brackets which shall be attached directly to the heater's chassis and be capable of mounting the heater at a 0° to 30° angle from horizontal.
D. The heater shall be manufactured with air louvers and vents to allow sufficient air movement for efficient heater operation.
E. An optional pre-set adjustable mounting kit shall be made available for ease of installation.
F. The heater shall be manufactured with an internal stainless steel liner and rain barrier.
G. The heater's design shall not require a power assisted fan to aid in the combustion process.

INFRARED PATIO HEATER BURNER CONTROLS

A. Heaters shall be equipped with a direct spark ignition of the main burner. Loss of power causes 100% safety shut-off of main burner(s).
B. 24 V circuit control shall incorporate a potting compound for product application in high humidity areas.
C. The heater's control system shall be designed to shut off the gas flow to the main burner in the event either a gas supply or power supply interruption occurs. In the event of circuit control lock-out, an interruption of power source will restart the firing sequence.

DETROIT RADIANT PRODUCTS COMPANY
Detroit Radiant Products
21400 Hoover Rd.
Warren, MI 48089
Phone: (586) 756-0950
Email: sales@drp-co.com
www.reverberray.com