RE-VERBER-RAY HEATER SUBMITTAL SHEET

HL2-SS SERIES TUBE HEATERS

TWO-STAGE LOW INTENSITY GAS-FIRED INFRARED TUBE HEATERS & ACCESSORIES

PROJECT ID: _____ ADDRESS: _____

PROJECT NAME: _____

DATE: _____ CITY: _____ STATE: _____ ZIP: _____

Submitted By: _____ Address: _____

Company: _____

Phone: _____ City: _____

Email: _____ State: _____ Zip: _____

Engineer: _____ Contractor: _____

Phone/Email: _____ Phone/Email: _____

Address: _____ Address: _____

City: _____ City: _____

State: _____ Zip: _____ State: _____ Zip: _____

QTY.	MODEL #	TAG	INDICATE GAS TYPE	BTU/h High Fire	BTU/h Low Fire	STRAIGHT LENGTH	U-TUBE LENGTH	STD. WEIGHT	TYP. OR RCMD. MOUNTING HEIGHTS[1]
	HL2-SS-20-75		N or P	75,000	50,000	21' - 7"	13' - 0"	145 lbs.	10' to 15'
	HL2-SS-20-80		N or P	80,000	52,000	21' - 7"	13' - 0"	145 lbs.	10' to 15'
	HL2-SS-30-75		N or P	75,000	50,000	31' - 3"	17' - 10"[2]	195 lbs.	11' to 18'
	HL2-SS-30-80		N or P	80,000	52,000	31' - 3"	17' - 10"[2]	195 lbs.	11' to 18'
	HL2-SS-30-100		N or P	100,000	65,000	31' - 3"	17' - 10"[2]	195 lbs.	12' to 20'
	HL2-SS-40-75		N or P	75,000	50,000	40' - 11"	22' - 8"	235 lbs.	11' to 18'
	HL2-SS-40-80		N or P	80,000	52,000	40' - 11"	22' - 8"	235 lbs.	11' to 18'
	HL2-SS-40-100		N or P	100,000	65,000	40' - 11"	22' - 8"	235 lbs.	12' to 20'
	HL2-SS-40-125		N or P	125,000	82,000	40' - 11"	22' - 8"	235 lbs.	13' to 23'
	HL2-SS-40-150		N or P	150,000	100,000	40' - 11"	22' - 8"	235 lbs.	14' to 25'
	HL2-SS-50-125		N or P	125,000	82,000	50' - 7"	27' - 6"[2]	290 lbs.	15' to 27'
	HL2-SS-50-150		N or P	150,000	100,000	50' - 7"	27' - 6"[2]	290 lbs.	15' to 27'
	HL2-SS-50-175		N or P	175,000	125,000	50' - 7"	27' - 6"[2]	290 lbs.	16' to 30'
	HL2-SS-60-150		N or P	150,000	100,000	60' - 3"	32' - 4"	330 lbs.	16' to 30'
	HL2-SS-60-175		N or P	175,000	125,000	60' - 3"	32' - 4"	330 lbs.	16' to 30'
	HL2-SS-60-200		N or P	200,000	145,000	60' - 3"	32' - 4"	330 lbs.	17' to 35'

[1] Typical or recommended mounting heights are provided as a guideline. Actual conditions may dictate variations from this data.

[2] Model requires 5EA-SUB accessory package when installing heater in a U-shaped configuration.

DETROIT RADIANT PRODUCTS COMPANY

Detroit Radiant Products
21400 Hoover Rd.
Warren, MI 48089

Phone: (586) 756-0950
Email: sales@drp-co.com
www.reverberray.com

HL2-SS SERIES FEATURED SPECIFICATIONS

APPROVALS
- CSA Design Certified
- Commercial/Industrial Approval
- Indoor/Outdoor Approval

BURNER CONTROL BOX
- Sight glass for burner inspection
- Totally enclosed components
- 304 series stainless steel construction
- Operational indicator lights
- Silicone sealed

GAS CONNECTION
- ⅞" flare-M FPT Connection to ½" x 24" (304) SS PVC coated flex connector provided
- ½" NPT ball valve & inlet tap included

GAS SUPPLY (Inches W.C.)
- Manifold pressure: Nat 3.5; Prop 10.0
- Min. Inlet pressure: Nat 5.0; Prop 11.0
- Max. Inlet pressure: Nat 14.0; Prop 14.0

POWER SUPPLY
- 120 VAC, 60 Hz GRD, 1 Ph., 3-wire
- 60 in. grounded power cord
- Ignition current: 4.8 amps
- Running current: 1.1 amps

CONTROLS
- Two stage gas valve (at 100% and 65%)
- Air proving safety switch
- Silicon carbide hot surface igniter
- Pre- and post- purge controls
- Flame rod sensing
- 24 V thermostatic control voltage
- Self-diagnostic LED

REFLECTOR
- Highly polished 304 stainless steel
- Two end caps included
- Reflector tension springs
- Continuous overlap design
- One reflector center support per reflector

COMBUSTION & RADIANT TUBES
- 16 ga. 4" O.D. 304 series stainless steel radiant emitter tubes
- 409 series combustion chamber
- All tubes coated with high temperature, corrosion resistant black coating, 0.95 emissivity
- Slip-fit swaged connection
- Turbulator baffle

COMBUSTION AIR INLET & VENTING
- Preset 4" combustion air inlet collar
- Sidewall or roof venting

LIMITED WARRANTY
- 3 years - Burner box components
- 5 years - Combustion and radiant tubes
- 10 years - Burner

OPTIONAL UPGRADES

Options in this section must be ordered at time of manufacture and cannot be added after heater is built.

☐ **HLRB** Relay board, required on heaters sharing a common thermostat or a single vent.

☐ **5EA-SUB** Substitutes one 10 ft. radiant tube and reflector for two 5 ft. sections. This is ideal for making U-shaped heater configurations from 30 ft., 50 ft. and 70 ft. models. One per heater.

DETROIT RADIANT PRODUCTS COMPANY
Detroit Radiant Products
21400 Hoover Rd.
Warren, MI 48089
Phone: (586) 756-0950
Email: sales@drp-co.com
www.reverberray.com

RE-VERBER-RAY SAFETY SUBMITTAL SHEET

HL2-SS SERIES CLEARANCES TO COMBUSTIBLES

All listed clearances to combustibles are in inches.

MODEL NO.	MOUNTING ANGLE[1]	SIDES FRONT	SIDES BEHIND	TOP	BELOW
HL2-SS (20, 30, 40) - 75 [N,P]	0°	9	9	6	60
	45°	39	8	10	60
W/1 side shield	0°	29	8	6	60
W/2 side shields	0°	9	9	6	60
20 ft. from burner	0°	7	7	6	30
HL2-SS (20, 30, 40) - 80, 100 [N,P]	0°	14	14	6	66
	45°	39	8	10	66
W/1 side shield	0°	29	8	6	66
W/2 side shields	0°	16	16	6	66
20 ft. from burner	0°	7	7	6	30
HL2-SS (40, 50) - 125 [N,P]	0°	20	20	6	76
	45°	58	8	10	76
W/1 side shield	0°	42	8	6	76
W/2 side shields	0°	20	20	6	76
20 ft. from burner	0°	7	7	6	30
HL2-SS (40, 50, 60) - 150 [N,P]	0°	24	24	6	81
	45°	58	8	10	81
W/1 side shield	0°	42	8	6	81
W/2 side shields	0°	23	23	6	81
20 ft. from burner	0°	11	11	6	44
HL2-SS (50, 60) - 175 [N,P]	0°	34	34	6	92
	45°	63	8	10	92
W/1 side shield	0°	50	8	6	92
W/2 side shields	0°	30	30	6	92
20 ft. from burner	0°	11	11	6	44
HL2-SS (60) - 200 [N,P]	0°	41	41	6	94
	45°	63	8	10	94
W/1 side shield	0°	54	8	6	94
W/2 side shields	0°	30	30	6	94
20 ft. from burner	0°	11	11	6	44

[1] Heaters mounted on an angle between 0° and 45° must maintain clearances posted for 0° or 45°; whichever is greater.

0° Mounting Angle

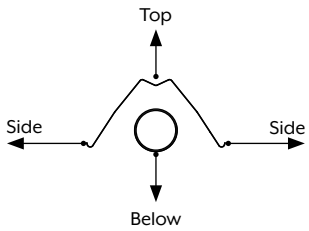

45° Mounting Angle

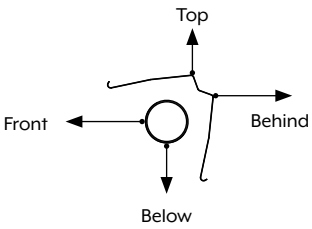

0° w/1 Side Shield (P/N: SSE)

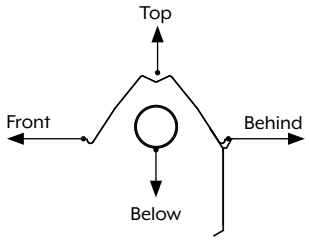

0° w/ 2 Side Shields (P/N: SSE)

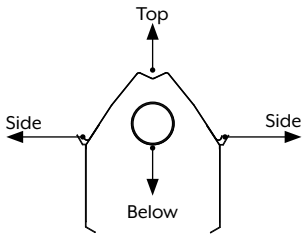



Read and understand the installation, operation, and maintenance manual prior to installing or servicing this unit.

In locations used for the storage of combustible materials, signs must be posted adjacent to the heater's thermostat specifying stacking heights.

DETROIT RADIANT PRODUCTS COMPANY
Detroit Radiant Products
21400 Hoover Rd.
Warren, MI 48089
Phone: (586) 756-0950
Email: sales@drp-co.com
www.reverberray.com

RE-VERBER-RAY DIMENSIONAL SUBMITTAL SHEET

HL2-SS SERIES DIMENSIONS

Drawing NTS

Burner Control Box with U-Bend • End View

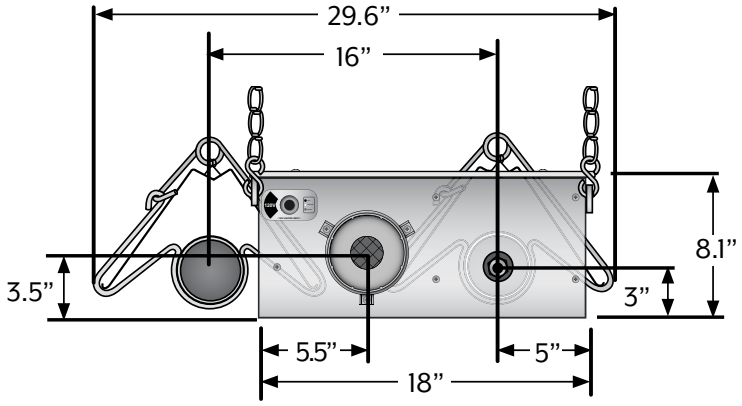

MODEL NUMBER	DIMENSION A STRAIGHT	DIMENSION B U-TUBE
HL2-SS-20	21’ – 7”	13’ – 0”
HL2-SS-30	31’ – 3”	17’ – 8”[1]
HL2-SS-40	40’ –11”	22’ – 8”
HL2-SS-50	50’ – 7”	27’ – 4”[1]
HL2-SS-60	60’ – 3”	32’ – 4”

[1]with 5EA-SUB

Side View

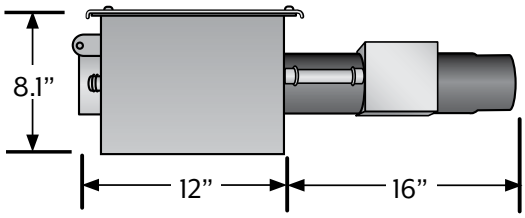

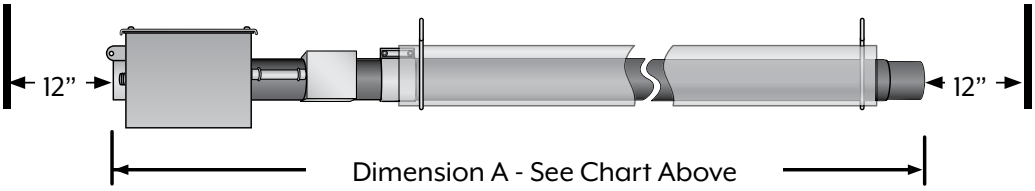

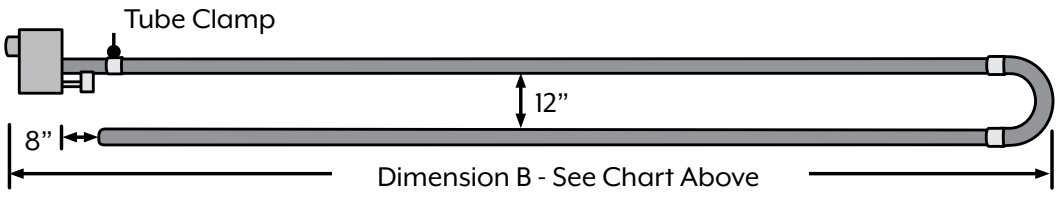

DETROIT RADIANT PRODUCTS COMPANY
Detroit Radiant Products
21400 Hoover Rd.
Warren, MI 48089
Phone: (586) 756-0950
Email: sales@drp-co.com
www.reverberray.com

RE-VERBER-RAY WIRING SUBMITTAL SHEET

HL2-SS SERIES WIRING DIAGRAMS

Internal Wiring Diagram

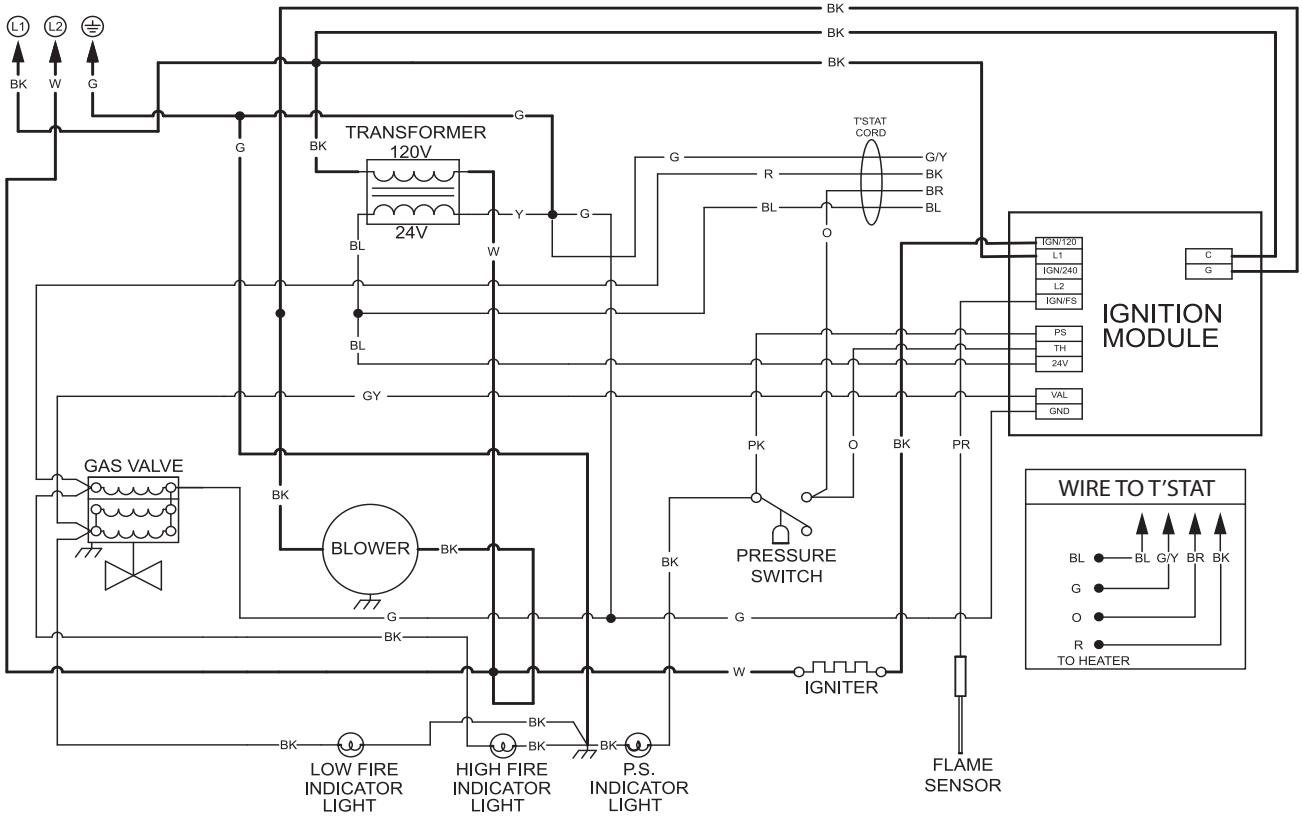

WIRING INFORMATION:

LINE VOLTAGE:

- FACTORY STANDARD
- FACTORY OPTION
- FIELD INSTALLED

LOW VOLTAGE:

- FACTORY STANDARD
- FACTORY OPTION
- FIELD INSTALLED

DETROIT RADIANT PRODUCTS COMPANY
Detroit Radiant Products
21400 Hoover Rd.
Warren, MI 48089
Phone: (586) 756-0950
Email: sales@drp-co.com
www.reverberray.com

RE-VERBER-RAY WIRING SUBMITTAL SHEET

HL2-SS SERIES WIRING DIAGRAMS (cont.)

Internal Wiring Diagram with HLRP

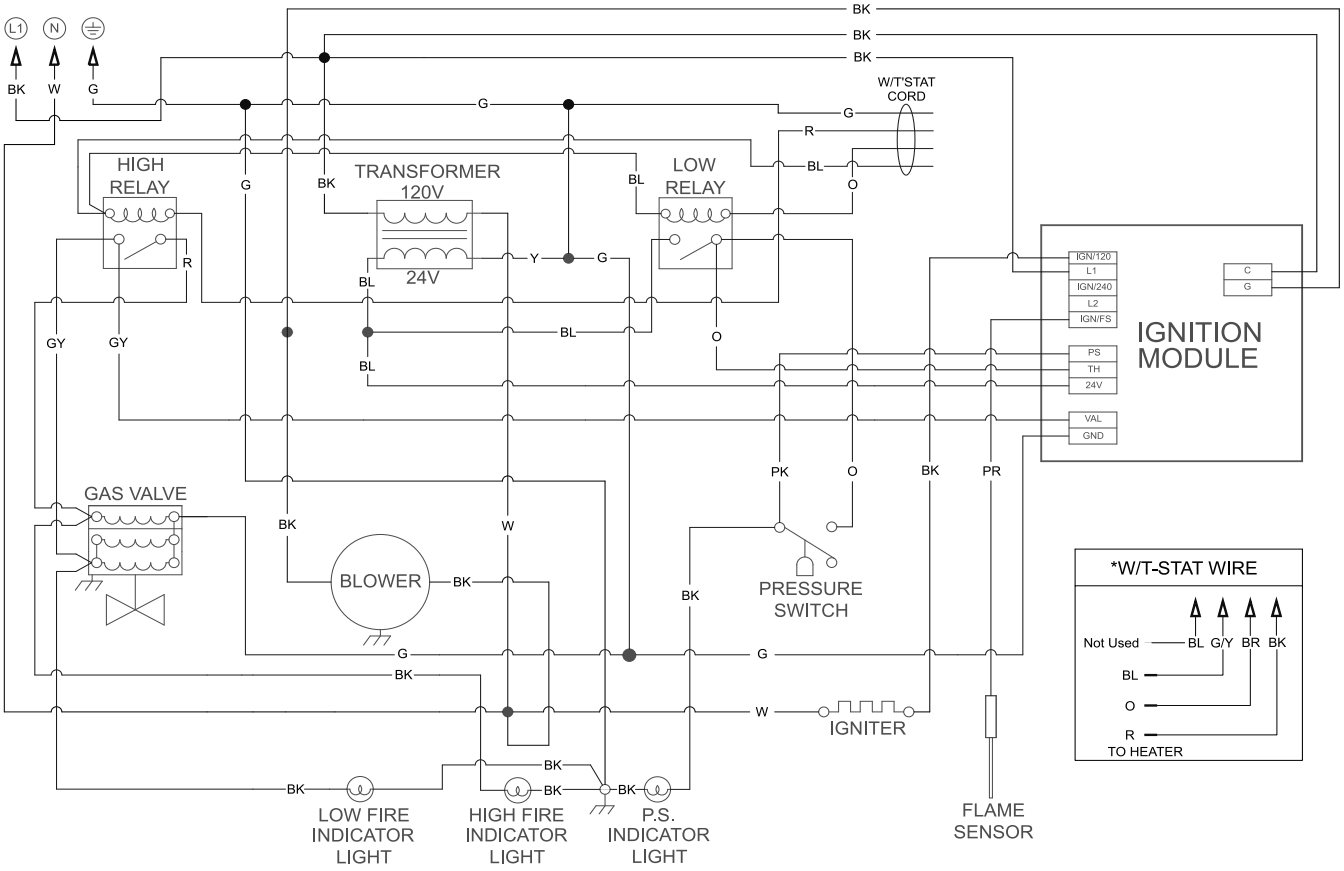

WIRING INFORMATION:

LINE VOLTAGE:

- FACTORY STANDARD
- FACTORY OPTION
- FIELD INSTALLED

LOW VOLTAGE:

- FACTORY STANDARD
- FACTORY OPTION
- FIELD INSTALLED

DETROIT RADIANT PRODUCTS COMPANY
Detroit Radiant Products
21400 Hoover Rd.
Warren, MI 48089
Phone: (586) 756-0950
Email: sales@drp-co.com
www.reverberray.com

RE-VERBER-RAY WIRING SUBMITTAL SHEET

HL2-SS SERIES WIRING DIAGRAMS (cont.)

Field Wiring—Single Heater, Single Thermostat. No Relay Board (white label)

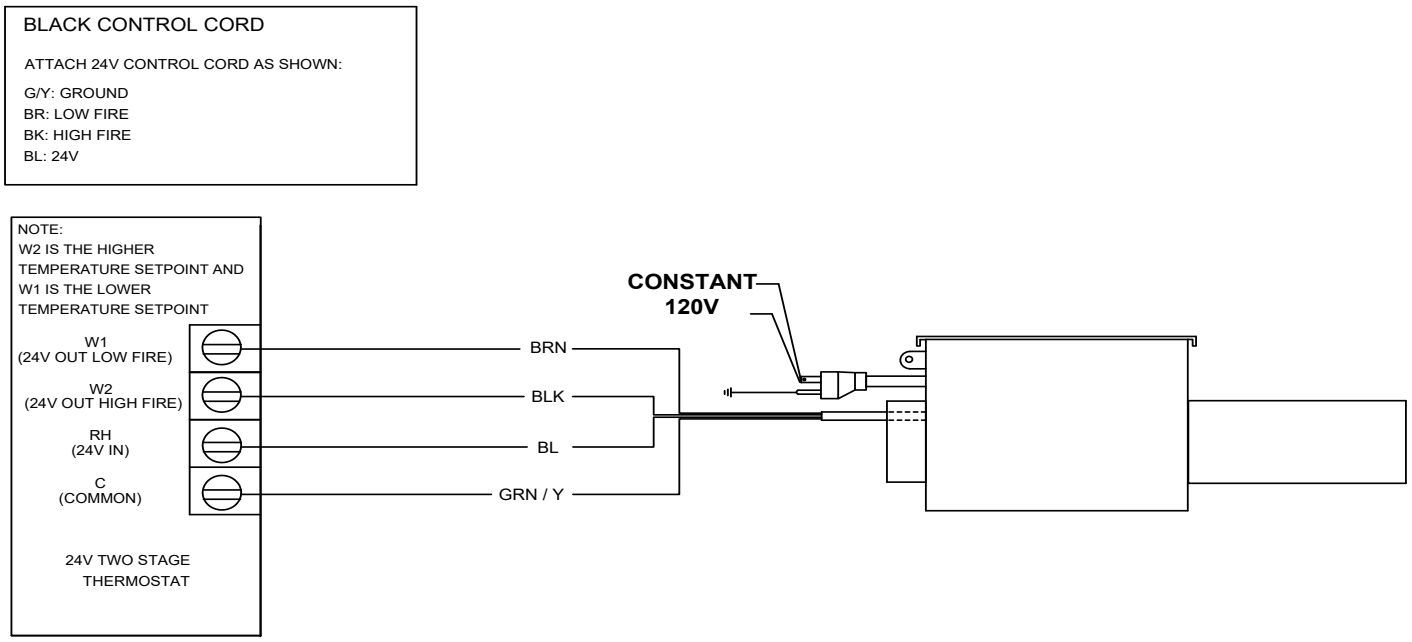

Field Wiring—Multiple Heaters, Single Thermostat. With a Relay Board (HLRP)

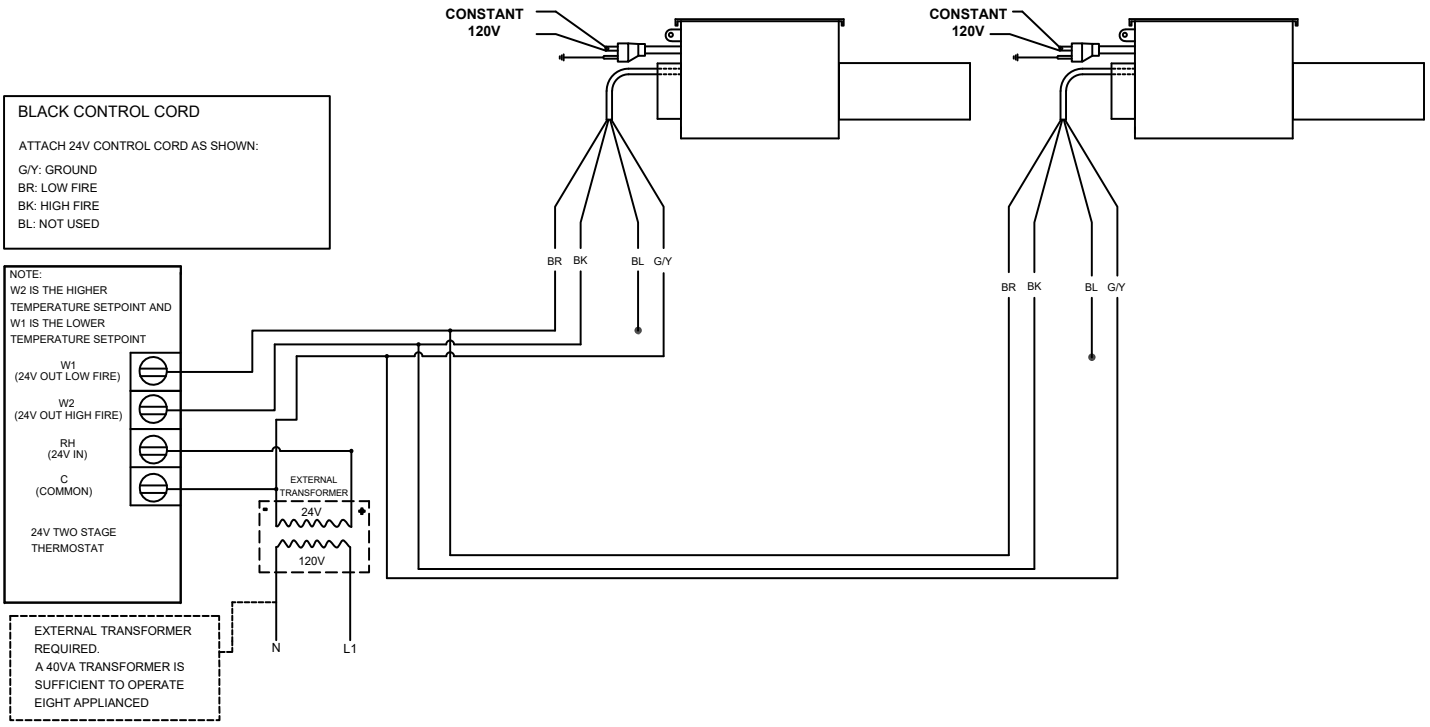

DETROIT RADIANT PRODUCTS COMPANY
Detroit Radiant Products
21400 Hoover Rd.
Warren, MI 48089
Phone: (586) 756-0950
Email: sales@drp-co.com
www.reverberray.com

RE-VERBER-RAY HEATER SUBMITTAL SHEET

HL2-SS SERIES TUBE HEATERS

TWO-STAGE LOW INTENSITY GAS-FIRED INFRARED TUBE HEATER WRITTEN SPECIFICATIONS

TUBULAR INFRARED HEATERS

A. Basis-of-design product: Subject to compliance with requirements, provide Detroit Radiant Products Company; Re-Verber-Ray HL2-SS Series.
B. Fuel type: Burner shall be designed for [natural] [propane] gas having characteristics same as those of gas available at project site.
C. Gas control: Operation shall include a defined input differential. Heater must be CSA Design Certified to operate at an input differential of at least 30% between the low and nominal rated input modes.
    1. The heater's control system shall be designed to shut off the gas flow to the main burner in the event either a gas supply or power supply interruption occurs.
D. Combustion chamber: Shall be 4" O.D. 16 ga. 409 series stainless steel, finished with a high emissivity rated, corrosion-resistant, black coating.
E. Emitter tube: Shall be 4" O.D. 16 ga. 304 series stainless steel finished with a high emissivity rated, corrosion-resistant, black coating.
F. Burner type: Unit shall be a positive pressure power burner with a combustion fan upstream of the burner and exhaust gases for component longevity, maximum combustion efficiency, and energy transfer. Negative pressure (pull through) type appliances will not be allowed.
G. Fan enclosure: Combustion fan shall be totally housed inside burner control box and not exposed. Appliances with exposed combustion/ exhauster fans shall not be permitted.
H. Burner: Stainless-steel venturi burner. The flame anchoring screen shall have a minimum temperature rating equivalent to 430 grade stainless steel. Non stainless steel burners shall not be permitted.
I. Tube connections: The heater's combustion chamber and radiant emitter tube shall incorporate a 4 inch slip-fit, interlocking connection in which the upstream tube slides into the next tube and is held by a bolted clamp. A butted tube connection system shall not be permitted.
J. Ignition system : Hot surface silicon carbide capable of temperatures achieving 2400°F. Igniter shall be readily accessible and serviceable without the use of tools. Spark ignition systems shall not be permitted.
K. Reflectors: Shall be 304 series stainless steel with a multi-faceted design which includes reflector end caps. Reflector shall have a polished bright finish with clear visual reflection ability. (A sample will be required at time of submittal). Reflector shall have a minimum of 7 sheet metal bends in its fabrication to optimize downward radiation. Reflectors shall be rotatable from 0° to 45° when required. The heater's reflector hanging system shall be designed to permit expansion while minimizing noise and/or rattles.
L. Control box: Heater's control housing shall be totally enclosed with a corrosion resistant 304 series stainless steel exterior with silicone sealant.
    1. Air intake: An air intake collar shall be supplied as part of the burner control assembly to accept a 4 inch O.D. supply duct.
    2. The controls shall be easily serviceable by removing one (1) panel. The silicon carbide igniter shall be readily accessible and serviceable without the use of tools.
    3. Outdoor modifications are required for any application that will be placed in a space defined as outdoors. The rating label shall bear the outdoor certification approval.
M. Heaters shall be equipped with a sight glass allowing a visual inspection of igniter and burner operation from the floor. Sight glass visible only at appliance level shall not be permitted.
N. The heaters shall utilize a downstream turbulator baffle for maximum heat transfer.
O. Heater shall be supplied with a PVC coated stainless steel flexible gas connector.
P. Burner Safety Controls:
    1. Heater controls shall include a safety differential pressure switch to monitor combustion air flow, as to provide complete burner shutdown due to insufficient combustion air or flue blockage.
    2. The heater shall incorporate a self-diagnostic ignition module, and recycle the heater after an inadvertent shutdown.
    3. The heater's control system shall be designed to shut off the gas flow to the main burner in the event either a gas supply or power supply interruption occurs.
    4. The heater's blower motor shall be thermally protected and the motor's impeller shall be balanced.
    5. Heater control assembly shall include three indicator lights that define the units operating input ranges. One indicator shall validate air flow. Two indicator lights shall indicate low and high firing stages.
    6. The heater's air flow control system shall provide a 45 second pre-purge prior to initiating burner operation and a 90 second post-purge upon completion, effectively removing all products of combustion from heat exchanger and/or radiant tubes.
    7. No condensation shall form as a result of combustion in the combustion chamber or radiant tubes while at operating temperatures.
    8. Thermostat control shall be two-stage operating on 24 volts.
Q. Venting: Shall be per manufacturer approval and specifications.
R. Thermostat: Devices and wiring are specified in Division 23 Section "Instrumentation and Control for HVAC."
    1. Thermostat: 2-stage, digital programmable wall-mounting type with 50° to 90°F (10° to 32°C) operating range.
    2. Control Transformer: Integrally mounted.

DETROIT RADIANT PRODUCTS COMPANY
Detroit Radiant Products
21400 Hoover Rd.
Warren, MI 48089
Phone: (586) 756-0950
Email: sales@drp-co.com
www.reverberray.com